Crawler Excavator

R 954 C
Litronic®

Operating Weight:	49,200 - 57,000 kg
Engine Output:	240 kW / 326 HP
Bucket Capacity:	1.30 - 3.00 m³

LIEBHERR

R 954 C
Litronic®

Operating Weight:	49,200 - 57,000 kg
Engine Output:	240 kW / 326 HP
Bucket Capacity:	1.30 - 3.00 m³

Performance

Liebherr crawler excavators feature state-of-the-art technology and high-quality workmanship. The most important components of the drive system are all produced by Liebherr and are perfectly co-ordinated with one another. The engine generation, as further developed for the “C-series”, assures an effective power delivery, a high degree of efficiency, long life expectancy and complies with the emission standard IIIA / Tier 3.

Reliability

High demand for performance and quality is consequently converted into landmark solutions to achieve the highest level of dependability and reliability. Liebherr has over 50 years experience in the production of hydraulic excavators and has an unparalleled competence in design and know-how.

Comfort

In the operator’s station, the operator can look forward to a comfortable workstation that is designed according to the most up-to-date ergonomically know-how. The standard automatic climate control provides a pleasant working environment in all weather conditions.

Liebherr crawler excavators are particularly service-friendly: Maintenance work is simply and quickly accomplished due to well accessible service points.

Economy

Liebherr crawler excavators stand for maximum productivity. The sensitive excavator controls assure optimal efficiency in the interaction of excavator hydraulics and electronics. A wide selection of attachments, accessory tools and undercarriages with various dimensions provide the correct choice for every application.

Liebherr Diesel Engine

- Specifically designed for construction equipment
- Long life expectancy
- Incline lubrication capability for an up to 100% grade
- LIDEC-Engine Control – Liebherr Diesel Engine Control
- State-of-the-art technology with common rail injection system
- Complies with emission standard IIIA / Tier 3

Performance

Liebherr crawler excavators feature state-of-the-art technology and high-quality workmanship. The most important components of the drive system are all produced by Liebherr factories and are perfectly coordinated to each other.
The engine generation, as further developed for the “C-series”, assures an effective power delivery, a high degree of efficiency, long life expectancy and complies with the emission standard IIIA / Tier 3.

High Productivity

High digging and break-out forces

The R 954 C features high digging and break-out forces due to optimal attachment geometry. The remarkable forces are especially accomplished with the utilization of large-size stick and bucket cylinders.

Regeneration Plus

The “Regeneration Plus” function guarantees faster lowering speed, less pressure loss and more safety. A high productivity is achieved with the optimisation and interaction of the functions “pressure less lowering”, “regeneration” and “load holding” in combination with a high hydraulic performance.

Liebherr Engine Technology

Liebherr Diesel Power

The 6-cylinder in-line engine, developed for the R 954 C with the new common rail injection assures an effective power output, a high efficiency and a long life expectancy.
Already at a low speed range the engine develops a high output and contributes substantially to the economical operation of the entire machine.

Emission reduces combustion

The new engine generation with optimal performance density assures for a more environmentally-friendly fuel combustion. Higher ignition pressures and the newly designed injection technology guarantee the compliance with the emission standard IIIA / Tier 3.

Heavy-duty undercarriage

- The combination of high-tensile strength steel plates and steel castings minimize tension
- Undercarriage sizes for every application are available

Multi-function tool carrier

- The correct digging tool for every material and application
- A modular quick coupler system designed and manufactured by Liebherr allows for the change-over of mechanical and hydraulic tools in a matter of seconds
- With Likufix, the change-over of all hydraulic and mechanical tools can be completed from the operator’s station

Dependable design

- Designed with casted bell-housings
- Features two separate pins
- Maximum strength even at high forces
- Long term advatages due to optimal stress-flow design

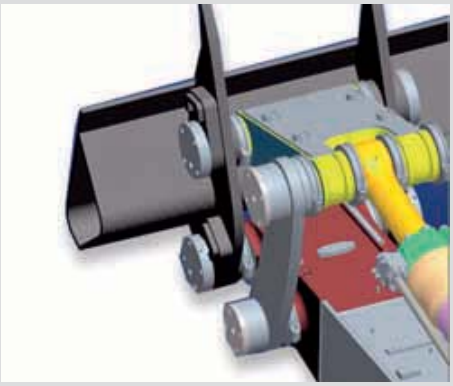

Reliability

The high demand for performance and quality is consequently converted into landmark solutions to achieve the highest level of dependability and availability. Liebherr has 50 years experience in the production of hydraulic excavators and has an unparalleled competence in design and know-how.

Technology with a vision

Optimized hydraulics

External bypass lines at the control valve apply the oil flow to the appropriate attachment functions. The optimal hose routing from the control valve to the attachment substantially increases the dependability of the hydraulic system.

Power pack

The individual components of the drive unit (i.e. construction equipment engine, travel and swing gearboxes, main pumps and hydraulic cylinders), produced by sister companies of Liebherr are coordinated to fit each other perfectly. They guarantee maximum dependability as an integral part of the total system which is designed for long life expectancy.

Quality to the last detail

The clearly laid out routing of the hydraulic, lubrication and electrical lines assures the highest reliability and performance of the machine. Optimal corrosion protection is achieved with pre-painted and surface-treated parts.

Heavy-duty attachments with long-term advantage

Robust attachment concept

With the utilization of steel castings at every pivot point, the attachment is consistently able to withstand the most server demands.

Optimized stress flow

The swing ring tower is made from one piece, which transfers the forces – following the principal of “stress flow design” - into the undercarriage. For lasting protection against dirt and damage, Liebherr swing rings are sealed and have internal teeth.

Bucket linkage

- Optional sealed linkage bearings
- Optimal protection for under-water work
- Increased life expectancy of the attachment

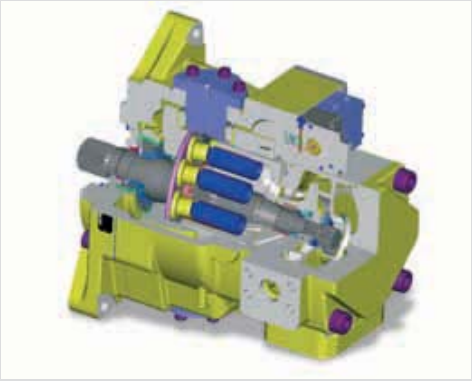

Key components made by Liebherr

- Decades of experience with the development, design and manufacturing of components
- Engines, hydraulic pumps and motors, swing and travel gearboxes as well as electronic elements from in-house production
- Manufacturing centers for components in Germany and Switzerland produce according to the latest production methods

Hydraulic reservoir stop valve

- Easy and quick interruption of the oil circuit between hydraulic reservoir and hydraulic system
- No drainage of fluid necessary for service or repair work on the hydraulic system

Comfort

In the operator station, the operator can look forward to a comfortably appointed workstation that is designed according to the most up-to-date ergonomically know-how. The standard automatic climate control provides a pleasant working environment at any weather condition.
Liebherr crawler excavators are particularly service-friendly: maintenance work is simply and quickly accomplished due to well accessible service points.

Standard maintenance advantage

Easy accessibility
All service points are easily accessible and the R 954 C features a central lubrication point as a standard feature. Daily preventive maintenance can be completed in a short period of time.

Maintenance friendly track components
Top rollers, track rollers and track link pins are lubricated for the life of the excavator. The grease cylinder of the idler tensioner is sealed against dirt.

Work place with feel-well character

Optimal visibility
The operator station's generously-sized windows provide outstanding visibility of the work and surrounding area.

Well thought-out arrangement
Design and arrangement of the seat, controls and displays are perfectly tuned to each other in an ergonomically-integrated concept. The operator's seat has shock-absorbing suspension and is adjustable to the individual preference of each operator.

Easy operation
The control consoles and information display are arranged within clear view of the operator and are easy to reach. New joysticks, with reduced operating force, are ergonomically shaped and allow pleasant and fatigue-free work.

Easy access

- Comfortably positioned ascents on both sides provide good accessibility to all service points
- Ergonomically positioned hand rails ensure secure ascent and descent
- Additional hand rails guarantee maximum safety

Liebherr Operator's station

- Generously-sized windows allow for optimal visibility
- Operator's seat is individually adjustable and includes a shock-absorbing cushion
- Standard automatic climate control
- Right-side window without vertical center post
- Lockable storage behind seat

Hydrostatic fan drive

- The new cooling system consists of two hydrostatically driven fans
- The fan speed is thermostatically-controlled by the temperature of hydraulic fluid, charging air and radiator fluid
- Accelerated warm-up period
- Fan uses only the needed power, reducing fuel consumption

Economy

Liebherr crawler excavators stand for a maximum of productivity. The sensitive excavator controls assure an optimal efficiency in the interaction of excavator hydraulics and –electronics. A wide selection of attachments, accessory tools and varied dimensioned undercarriages provide the correct choice for each application.

Top technology for maximum profitability

Electronic engine speed sensing control

This regulating system causes an efficient conversion of the engine output in hydraulic performance – which results in better utilization of the available engine power. The result: higher digging forces, shorter cycle times and lower fuel consumption.

Liebherr Tool Control

Immediately after the exchange of a hydraulic tool, the required pressure and oil flow settings are available with the push of a button. Up to 10 combinations with the designated names of the tools can be programmed. No tool changeover system is as simple or time-saving.

Outstanding parts availability

Quick spare parts supply

80,000 line items are always in stock for the global part requirements. Emergency part orders are shippable within 24 hours.

Professional help on-call

Liebherr's customer service is accessible on a 24/7 basis. Qualified professionals are available around the clock to respond to all questions from part supplies to repair advise.

Extensive service packages

Custom-tailored service packages guarantee service with individually-focused technical and logistical attention. Liebherr provides solutions with components from remanufactured repair or rebuild programs for every requirement – manufactured to maintain genuine quality.

New bucket shape

- The new L-shape features a longer bottom and a strongly waved side cutters
- Particularly suitable for applications in rocky conditions as well as for loading hard and coarse material
- Ideal for placing rip-rap on embankments

Turbo charger with waste-gate

- Optimized turbo charger technology
- Full utilization of the performance potential for power development in lower speed ranges
- Less wear on the turbine components

Technical Data

Engine

Rating per ISO 9249	240 kW (326 HP) at 1800 RPM
Model	Liebherr D 936 L
Type	6 cylinder in-line
Bore/Stroke	122/150 mm
Displacement	10,5 l
Engine operation	4-stroke diesel unit pump system turbo-charged and after-cooled reduced emissions
Cooling	water-cooled and integrated motor oil cooler
Air cleaner	dry-type air cleaner with pre-cleaner, primary and safety elements, automatic dust discharge
Fuel tank	700 l
Standard	sensor controlled engine idling
Electrical system	
Voltage	24 V
Batteries	2 x 170 Ah/12 V
Starter	24 V/7,8 kW
Alternator	three phase current 28 V/80 A

Hydraulic System

Hydraulic pump for attachment and travel drive	two Liebherr variable flow, swash plate pumps
Max. flow	2 x 350 l/min.
Max. pressure	350 bar
Pump regulation	electro-hydraulic with electronic engine speed sensing regulation, pressure compensation, flow compensation, automatic oil flow optimizer
Hydraulic pump for swing drive	reversible, variable flow, swash plate pump, closed-loop circuit
Max. flow	211 l/min.
Max. pressure	384 bar
Hydraulic tank	440 l
Hydraulic system	790 l
Hydraulic oil filter	2 full flow filters in return line with integrated fine filter area (5 µm)
Hydraulic oil cooler	cooler unit, consisting of radiator for engine coolant with after-cooler core, sandwiched with cooler for hydraulic fluid and fuel with hydro-statically controlled fan drives
MODE selection	adjustment of machine performance and the hydraulics via a mode selector to match application
ECO	for especially economical and environmentally friendly operation
POWER	for maximum digging power and heavy duty jobs
LIFT	for lifting
FINE	for precision work and lifting through very sensitive movements
RPM adjustment	stepless adjustment of engine output via the rpm at each selected mode
Liebherr Tool Control	ten preadjustable pump flows and pressures for add on tools

Hydraulic Controls

Power distribution	via control valves in single block with integrated safety valves
Flow summation	to boom and stick
Closed-loop circuit	for uppercarriage swing drive
Servo circuit	
Attachment and swing	– proportional via joystick levers
Travel	– proportional via foot pedals or removable hand levers – speed pre-selection
Additional functions	via foot pedals or joystick toggle switch

Swing Drive

Drive by	Liebherr swash plate motor with integrated brake valves
Transmission	Liebherr compact planetary reduction gear
Swing ring	Liebherr, sealed single race ball bearing swing ring, internal teeth
Swing speed	0–5,6 RPM stepless
Swing torque	165 kNm
Holding brake	wet multi-disc (spring applied, pressure released)
Option	pedal controlled positioning brake

Operator's Cab

Cab	resiliently mounted, sound insulated, tinted windows, front window stores overhead, door with sliding window
Operator's seat	fully adjustable, shockabsorbing suspension, adjustable to operator's weight and size, 6-way adjustable Liebherr seat
Joysticks	integrated into adjustable consoles
Monitoring	menu driven query of current operating conditions via the LCD display. Automatic monitoring, display, warning (acoustical and optical signal) and saving machine data, for example, engine overheating, low engine oil pressure or low hydraulic oil level
Air conditioning	standard air conditioning, combined cooler/heater, additional dust filter in fresh air/recirculated
Noise emission	
ISO 6396	L_{pA} (inside cab) = 77 dB(A)
2000/14/EC	L_{WA} (surround noise) = 105 dB(A)

Undercarriage

Version	
HD	heavy duty
S-HD	super-HD-undercarriage for extreme and very tough applications, e.g. inquarries
Drive	Liebherr swash plate motors with integrated brake valves on both sides
Transmission	Liebherr planetary reduction gears
Travel speed	HD: low range –3,3 km/h high range –4,8 km/h S-HD: low range –2,6 km/h high range –3,6 km/h
Drawbar pull max.	HD: 429 kN S-HD: 553 kN
Track components	HD: D 7 G, maintenance-free S-HD: D 8 K, maintenance-free
Track rollers/Carrier rollers	HD: 10/2 S-HD: 8/3
Tracks	sealed and greased
Track pads	HD: triple grouser S-HD: double grouser
Digging locks	wet multi-discs (spring applied, pressure released)

Attachment

Type	combination of resistant steel plates and cast steel components
Hydraulic cylinders	Liebherr cylinders with special seal-system, shock absorbed
Pivots	sealed, low maintenance
Lubrication	semi-automatic central lubrication system (except link and tilt geometry)
Hydraulic connections	pipes and hoses equipped with SAE split-flange connections
Bucket	standard equipped with 27 t lifting eye

Dimensions

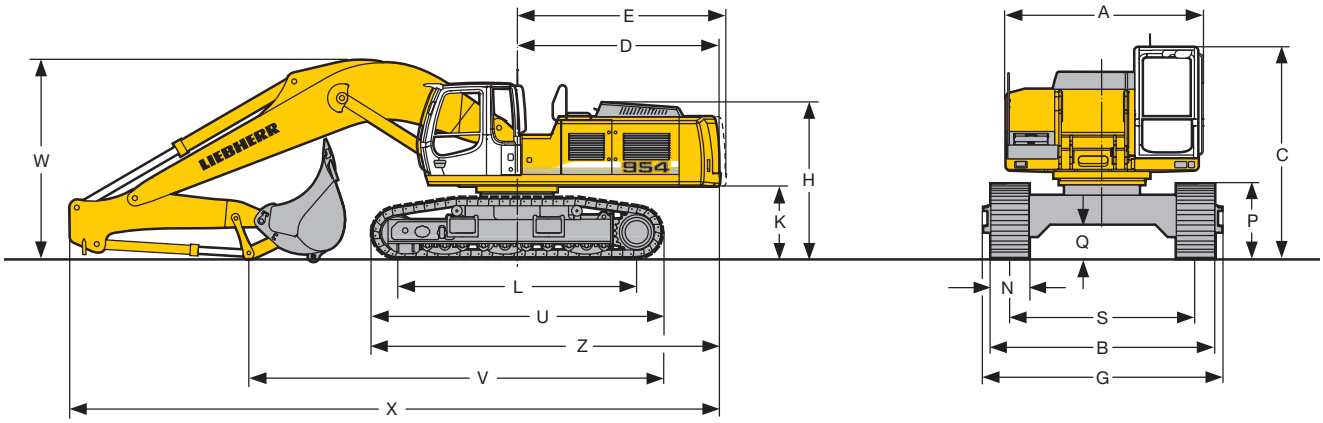

	HD		mm	S-HD		mm
A			3060			3060
A*			2980			2980
C			3285			3395
D			3850			3850
E			3850			3850
H			2900			3010
K			1350			1460
L			4400			4280
P			1170			1290
Q			543			605
S			2900			2900
U			5378			5345
Z			6600			6495
N	500	600	750	500	600	750
B	3524	3524	3650	3626	3626	3650
G	3720	3720	3720	3820	3820	3820

* without grip

HD-Undercarriage

	Stick Length	Goose-neck Boom 6,70 m	Goose-neck Boom 7,60 m	Goose-neck Boom 8,00 m	Goose-neck Boom 9,20 m
	m	mm	mm	mm	mm
V	2,35	7650	7700	8500	8750
	2,90	7050	7100	8000	9000
	3,80*	5900	7300	7000	7750
W	2,35	3800	3950	3550	4200
	2,90	3800	3950	3650	4300
	3,80	3800	4000	3800	4400
X	2,35	12200	13300	13750	14800
	2,90	12200	13200	13750	14800
	3,80	12200	13250	13650	14800

* without bucket

S-HD-Undercarriage

	Stick Length	Goose-neck Boom 6,70 m	Goose-neck Boom 7,60 m
	m	mm	mm
V	2,35	7600	7600
	2,90	7100	7100
W	2,35	3900	4000
	2,90	3950	4050
X	2,35	12000	13000
	2,90	12000	13000

Backhoe Attachment

with Gooseneck Boom 6,70 m

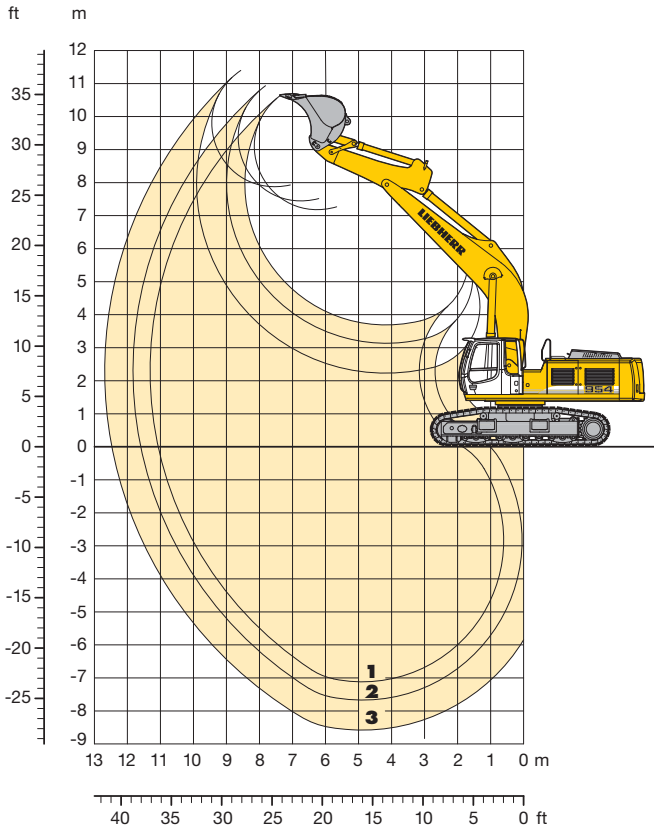

Digging Envelope

		1	2	3
Stick lengths	m	2,35	2,90	3,80
Max. digging depth	m	7,10	7,65	8,55
Max. reach at ground level	m	10,90	11,45	12,30
Max. dump height	m	7,10	7,35	7,75
Max. teeth height	m	10,50	10,80	11,25
Digging force SAE	kN/t	233/23,8	206/21,0	173/17,6
Digging force ISO	kN/t	248/25,8	217/22,1	181/18,6
Breakout force SAE	kN/t	269/27,4	269/27,4	269/27,4
Breakout force ISO	kN/t	313/31,9	313/31,9	313/31,9

Breakout force max. ISO 345/35,2 kN/t

Operating Weight and Ground Pressure

Operating weight includes basic machine with gooseneck boom 6,70 m, stick 2,35 m and bucket 2,35 m³.

Undercarriage		HD		
Pad width	mm	500	600	750
Weight	kg	49200	49700	51050
Ground pressure	kg/cm²	1,04	0,87	0,72

Optional: heavy duty counterweight
(Heavy duty counterweight increases the operating weight by 2000 kg and ground pressure by 0,04 kg/cm²)

Buckets

Cutting width	mm	1500[1)]	1550[2)]	1700[1)]	1750[2)]	1900[1)]	1900[1)]	1950[2)]
Capacity ISO 7451	m³	2,00	2,00	2,35	2,35	2,70	3,00	2,70
Weight	kg	2250	2800	2500	3050	2650	2750	3300
Suitable for material up to a specific weight of								
with stick 2,35 m	t/m³	2,20	2,20	2,20	2,20	1,80	1,80	1,50
with stick 2,90 m	t/m³	2,20	2,20	1,80	1,80	1,50	1,50	1,50
with stick 3,80 m	t/m³	1,80	1,80	1,50	1,50	1,20	–	–

1) Medium-duty bucket with Liebherr teeth size 25 (appropriate for materials up to classification 5, according to VOB, Section C, DIN 18300)
2) Heavy-duty rock bucket with Esco teeth size 61 (appropriate for materials above classification 6, according to VOB, Section C, DIN 18300)

Lift Capacities

with Gooseneck Boom 6,70 m

Stick 2,35 m

Height (m)	Under-carriage	Radius of load from centerline of machine (m) 3,0	4,5	6,0	7,5	9,0	10,5	12,0	13,5
12,0	HD								
10,5	HD								
9,0	HD								
7,5	HD				8,1# (8,1#)				
6,0	HD				8,6# (8,6#)				
4,5	HD		15,6# (15,6#)	11,5# (11,5#)	9,0 (9,6#)	6,4 (8,6#)			
3,0	HD		18,6 (20,4#)	12,1 (13,7#)	8,4 (10,8#)	6,1 (9,2#)			
1,5	HD		17,0 (19,4#)	11,1 (15,5#)	7,9 (11,8#)	5,8 (9,7#)			
0	HD		16,6 (22,0#)	10,5 (16,5#)	7,5 (12,5#)	5,6 (9,5)			
- 1,5	HD	17,2# (17,2#)	16,6 (22,7#)	10,4 (16,5#)	7,3 (12,6)				
- 3,0	HD	24,6# (24,6#)	16,9 (20,9#)	10,5 (15,6#)	7,4 (11,9#)				
- 4,5	HD	24,2# (24,2#)	17,6 (17,7#)	10,9 (13,2#)					
- 6,0	HD		11,5# (11,5#)						
- 7,5	HD								
- 9,0	HD								
-10,5	HD								

Stick 2,90 m

Height (m)	Under-carriage	Radius of load from centerline of machine (m) 3,0	4,5	6,0	7,5	9,0	10,5	12,0	13,5
12,0	HD								
10,5	HD								
9,0	HD								
7,5	HD								
6,0	HD				7,8# (7,8#)	6,4# (6,4#)			
4,5	HD			10,4# (10,4#)	8,8# (8,8#)	6,4 (7,9#)			
3,0	HD		18,5# (18,5#)	12,3 (12,8#)	8,5 (10,1#)	6,1 (8,6#)			
1,5	HD		17,5 (22,1#)	11,3 (14,8#)	7,9 (11,3#)	5,8 (9,3#)			
0	HD	9,4# (9,4#)	16,7 (22,0#)	10,6 (16,1#)	7,5 (12,2#)	5,5 (9,4)			
- 1,5	HD	15,0# (15,0#)	16,5 (23,2#)	10,3 (16,5#)	7,2 (12,5)	5,4 (9,3)			
- 3,0	HD	21,1# (21,1#)	16,7 (21,8#)	10,3 (15,9#)	7,2 (12,1#)				
- 4,5	HD	27,5# (27,5#)	17,2 (19,2#)	10,6 (14,2#)	7,5 (10,5#)				
- 6,0	HD	19,9# (19,9#)	14,3# (14,3#)						
- 7,5	HD								
- 9,0	HD								
-10,5	HD								

Stick 3,80 m

Height (m)	Under-carriage	Radius of load from centerline of machine (m) 3,0	4,5	6,0	7,5	9,0	10,5	12,0	13,5
12,0	HD								
10,5	HD								
9,0	HD								
7,5	HD					4,8# (4,8#)			
6,0	HD					6,2# (6,2#)	2,1# (2,1#)		
4,5	HD				7,5# (7,5#)	6,6 (6,9#)	4,2# (4,2#)		
3,0	HD	18,6# (18,6#)	15,3# (15,3#)	11,0# (11,0#)	8,7 (8,9#)	6,2 (7,7#)	4,5 (5,6#)		
1,5	HD	7,5# (7,5#)	18,5 (19,9#)	11,7 (13,4#)	8,1 (10,3#)	5,8 (8,5#)	4,2 (6,4#)		
0	HD	9,3# (9,3#)	17,1 (22,5#)	10,8 (15,2#)	7,5 (11,5#)	5,5 (9,2#)	4,0 (6,2#)		
- 1,5	HD	12,9# (12,9#)	16,5 (23,3#)	10,3 (16,2#)	7,2 (12,2#)	5,2 (9,2)	3,6# (3,6#)		
- 3,0	HD	17,2# (17,2#)	16,4 (22,8#)	10,1 (16,2#)	7,0 (12,2#)	5,1 (9,1)			
- 4,5	HD	22,7# (22,7#)	16,7 (21,1#)	10,2 (15,2#)	7,1 (11,5#)				
- 6,0	HD	25,9# (25,9#)	17,3 (17,6#)	10,6 (12,8#)					
- 7,5	HD		10,8# (10,8#)						
- 9,0	HD								
-10,5	HD								

The load values are quoted in tons (t) on the backhoe bucket's load hook, and may be swung 360° on firm and even ground. Values quoted in brackets apply to the undercarriage when in longitudinal position. Capacities are valid for 600 mm wide triple grouser pads. Indicated loads are based on ISO 10567 standard and do not exceed 75 % of tipping or 87 % of hydraulic capacity (indicated via #). Maximum load for the backhoe bucket's lifting eye is 27 t. Without bucket (2,35 m³), the lift capacities will increase by 2500 kg, without bucket cylinder, link and lever they increase by an additional 750 kg. Lifting capacity of the excavator is limited by machine stability, hydraulic capacity and maximum permissible load of the load hook.

According to European Standard, EN 474-5: In the European Union excavators have to be equipped with an overload warning device, a load diagram and automatic check valves on the hoist cylinders, when they are used for lifting operations which require the use of lifting accessories.

Backhoe Attachment

with Gooseneck Boom 7,60 m

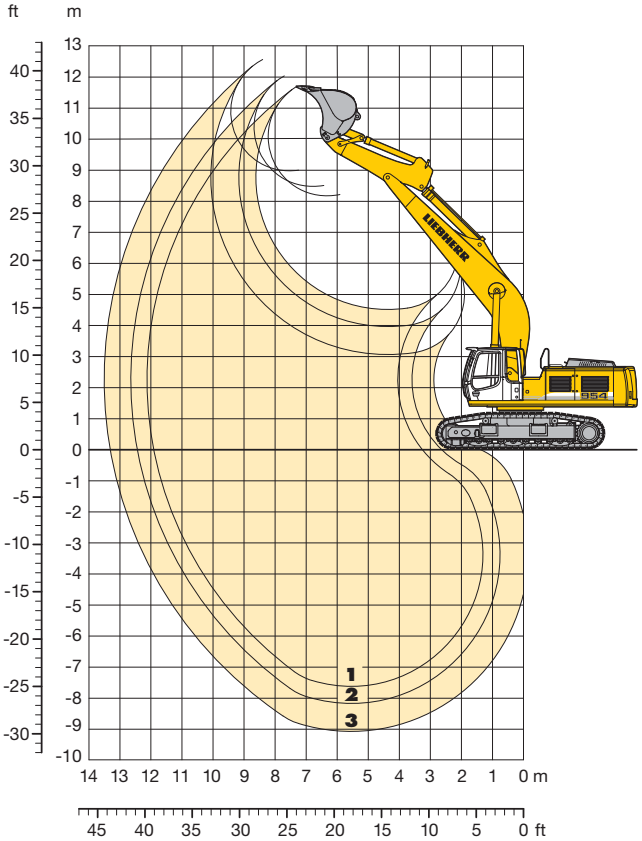

Digging Envelope

		1	2	3
Stick lengths	m	2,35	2,90	3,80
Max. digging depth	m	7,60	8,15	9,05
Max. reach at ground level	m	11,90	12,40	13,30
Max. dump height	m	8,15	8,45	8,95
Max. teeth height	m	11,70	12,00	12,55
Digging force SAE	kN/t	233/23,8	206/21,0	173/17,6
Digging force ISO	kN/t	248/25,8	217/22,1	181/18,6
Breakout force SAE	kN/t	269/27,4	269/27,4	269/27,4
Breakout force ISO	kN/t	313/31,9	313/31,9	313/31,9

Breakout force max. ISO 345/35,2 kN/t

Operating Weight and Ground Pressure

Operating weight includes basic machine with gooseneck boom 7,60 m, stick 2,90 m and bucket 2,00 m³.

Undercarriage		HD		
Pad width	mm	500	600	750
Weight	kg	49500	50000	51350
Ground pressure	kg/cm²	1,05	0,88	0,72

Optional: heavy duty counterweight
(Heavy duty counterweight increases the operating weight by 2000 kg and ground pressure by 0,04 kg/cm²)

Buckets

Cutting width	mm	1300[1)]	1350[2)]	1500[1)]	1550[2)]	1700[1)]	1750[2)]	1900[1)]	1900[1)]
Capacity ISO 7451	m³	1,65	1,65	2,00	2,00	2,35	2,35	2,70	3,00
Weight	kg	2100	2500	2250	2800	2500	3050	2650	2750
Suitable for material up to a specific weight of									
with stick 2,35 m	t/m³	–	–	2,20	1,80	1,80	1,80	1,50	1,20
with stick 2,90 m	t/m³	2,20	2,20	1,80	1,80	1,50	1,50	1,20	–
with stick 3,80 m	t/m³	1,80	1,80	1,50	1,50	1,20	–	–	–

[1)] Medium-duty bucket with Liebherr teeth size 25 (appropriate for materials up to classification 5, according to VOB, Section C, DIN 18300)
[2)] Heavy-duty rock bucket with Esco teeth size 61 (appropriate for materials above classification 6, according to VOB, Section C, DIN 18300)

Lift Capacities

with Gooseneck Boom 7,60 m

Stick 2,35 m

Height (m)	Under-carriage	Radius of load from centerline of machine (m) 3,0	4,5	6,0	7,5	9,0	10,5	12,0	13,5
12,0	HD								
10,5	HD								
9,0	HD								
7,5	HD				7,9# (7,9#)	6,6# (6,6#)			
6,0	HD				8,6# (8,6#)	6,6 (7,7#)			
4,5	HD		18,4# (18,4#)	12,3# (12,3#)	8,6 (9,7#)	6,2 (8,2#)			
3,0	HD			11,0 (14,3#)	7,9 (10,8#)	5,8 (8,8#)	4,3 (7,3#)		
1,5	HD			10,1 (15,5#)	7,3 (11,6#)	5,5 (9,4#)	4,1 (7,3)		
0	HD		10,9# (10,9#)	9,7 (15,9#)	6,9 (12,1#)	5,2 (9,1)			
- 1,5	HD	11,5# (11,5#)	15,8 (18,2#)	9,6 (15,6#)	6,8 (12,0)	5,1 (9,0)			
- 3,0	HD	18,7# (18,7#)	16,1 (18,7#)	9,8 (14,6#)	6,9 (11,4#)	5,2 (8,9#)			
- 4,5	HD	20,4# (20,4#)	16,2# (16,2#)	10,2 (12,7#)	7,2 (9,9#)				
- 6,0	HD		12,0# (12,0#)	9,3# (9,3#)					
- 7,5	HD								
- 9,0	HD								
-10,5	HD								

Stick 2,90 m

Height (m)	Under-carriage	Radius of load from centerline of machine (m) 3,0	4,5	6,0	7,5	9,0	10,5	12,0	13,5
12,0	HD								
10,5	HD								
9,0	HD								
7,5	HD					6,7# (6,7#)			
6,0	HD				7,9# (7,9#)	6,6 (7,1#)	4,3# (4,3#)		
4,5	HD		16,1# (16,1#)	11,3# (11,3#)	8,7 (9,0#)	6,3 (7,7#)	4,5 (6,9#)		
3,0	HD		11,2# (11,2#)	11,3 (13,4#)	8,0 (10,2#)	5,8 (8,4#)	4,3 (7,3#)		
1,5	HD		8,4# (8,4#)	10,3 (15,0#)	7,3 (11,2#)	5,4 (9,0#)	4,1 (7,2)		
0	HD		11,8# (11,8#)	9,7 (15,7#)	6,9 (11,8#)	5,1 (9,1)	3,9 (7,0)		
- 1,5	HD	10,3# (10,3#)	15,5 (16,8#)	9,5 (15,7#)	6,7 (11,9)	5,0 (8,9)	3,9 (7,0)		
- 3,0	HD	15,9# (15,9#)	15,8 (19,9#)	9,6 (15,0#)	6,7 (11,6#)	5,0 (8,9)			
- 4,5	HD	21,9# (21,9#)	16,3 (17,6#)	9,9 (13,5#)	6,9 (10,4#)				
- 6,0	HD	18,2# (18,2#)	13,9# (13,9#)	10,5 (10,7#)					
- 7,5	HD								
- 9,0	HD								
-10,5	HD								

Stick 3,80 m

Height (m)	Under-carriage	Radius of load from centerline of machine (m) 3,0	4,5	6,0	7,5	9,0	10,5	12,0	13,5
12,0	HD								
10,5	HD								
9,0	HD								
7,5	HD					5,7# (5,7#)	4,0# (4,0#)		
6,0	HD					6,2# (6,2#)	4,8 (5,8#)		
4,5	HD				7,9# (7,9#)	6,4 (6,8#)	4,6 (6,2#)		
3,0	HD		17,7# (17,7#)	11,9# (11,9#)	8,3 (9,2#)	5,9 (7,6#)	4,3 (6,6#)	3,1 (3,3#)	
1,5	HD		13,0# (13,0#)	10,7 (13,9#)	7,5 (10,4#)	5,5 (8,4#)	4,1 (7,1#)	3,0 (3,6#)	
0	HD	4,9# (4,9#)	12,6# (12,6#)	9,9 (15,2#)	7,0 (11,3#)	5,1 (9,0#)	3,8 (7,0)		
- 1,5	HD	8,8# (8,8#)	15,3# (15,3#)	9,5 (15,6#)	6,6 (11,8#)	4,9 (8,8)	3,7 (6,8)		
- 3,0	HD	12,8# (12,8#)	15,4 (19,5#)	9,4 (15,4#)	6,5 (11,7#)	4,8 (8,7)	3,7 (6,8)		
- 4,5	HD	17,4# (17,4#)	15,7 (19,4#)	9,5 (14,4#)	6,6 (11,1#)	4,9 (8,6#)			
- 6,0	HD	23,1# (23,1#)	16,3 (16,6#)	9,9 (12,5#)	6,9 (9,5#)				
- 7,5	HD		11,9# (11,9#)	8,8# (8,8#)					
- 9,0	HD								
-10,5	HD								

The load values are quoted in tons (t) on the backhoe bucket's load hook, and may be swung 360° on firm and even ground. Values quoted in brackets apply to the undercarriage when in longitudinal position. Capacities are valid for 600 mm wide triple grouser pads. Indicated loads are based on ISO 10567 standard and do not exceed 75 % of tipping or 87 % of hydraulic capacity (indicated via #). Maximum load for the backhoe bucket's lifting eye is 27 t. Without bucket (2,00 m³), the lift capacities will increase by 2250 kg, without bucket cylinder, link and lever they increase by an additional 750 kg. Lifting capacity of the excavator is limited by machine stability, hydraulic capacity and maximum permissible load of the load hook.

According to European Standard, EN 474-5: In the European Union excavators have to be equipped with an overload warning device, a load diagram and automatic check valves on the hoist cylinders, when they are used for lifting operations which require the use of lifting accessories.

Backhoe Attachment

with Gooseneck Boom 8,00 m

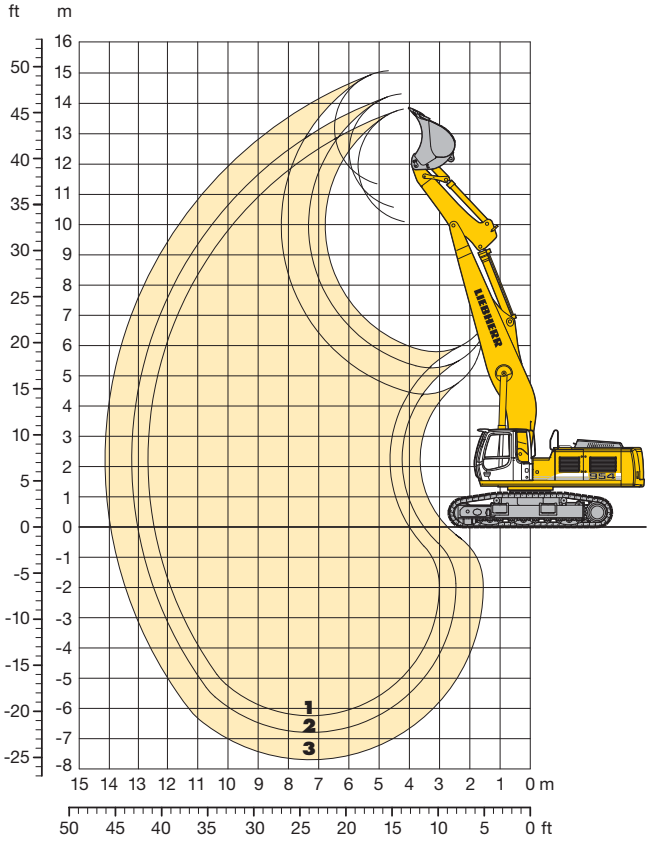

Digging Envelope

		1	2	3
Stick lengths	m	2,35	2,90	3,80
Max. digging depth	m	6,20	6,75	7,65
Max. reach at ground level	m	12,40	12,95	13,80
Max. dump height	m	10,10	10,60	11,35
Max. teeth height	m	13,80	14,30	15,05
Digging force SAE	kN/t	233/23,8	206/21,0	173/17,6
Digging force ISO	kN/t	248/25,8	217/22,1	181/18,6
Breakout force SAE	kN/t	269/27,4	269/27,4	269/27,4
Breakout force ISO	kN/t	313/31,9	313/31,9	313/31,9

Breakout force max. ISO 345/35,2 kN/t

Operating Weight and Ground Pressure

Operating weight includes basic machine with gooseneck boom 8,00 m, stick 2,90 m and bucket 2,00 m³.

Undercarriage		HD		
Pad width	mm	500	600	750
Weight	kg	50000	50500	51850
Ground pressure	kg/cm²	1,06	0,89	0,73

Optional: heavy duty counterweight
(Heavy duty counterweight increases the operating weight by 2000 kg and ground pressure by 0,04 kg/cm²)

Buckets

Cutting width	mm	1300[1)]	1350[2)]	1500[1)]	1550[2)]	1700[1)]
Capacity ISO 7451	m³	1,65	1,65	2,00	2,00	2,35
Weight	kg	2100	2500	2250	2800	2500
Suitable for material up to a specific weight of						
with stick 2,35 m	t/m³	2,20	2,20	1,80	1,80	1,50
with stick 2,90 m	t/m³	2,20	1,80	1,80	1,50	1,20
with stick 3,80 m	t/m³	1,80	1,50	1,50	1,20	–

[1)] Medium-duty bucket with Liebherr teeth size 25 (appropriate for materials up to classification 5, according to VOB, Section C, DIN 18300)
[2)] Heavy-duty rock bucket with Esco teeth size 61 (appropriate for materials above classification 6, according to VOB, Section C, DIN 18300)

Lift Capacities

with Gooseneck Boom 8,00 m

Stick 2,35 m

Height (m)	Under-carriage	Radius of load from centerline of machine (m) 3,0	4,5	6,0	7,5	9,0	10,5	12,0	13,5
12,0	HD								
10,5	HD			10,5# (10,5#)					
9,0	HD			11,9# (11,9#)	9,7 (10,1#)				
7,5	HD			12,6# (12,6#)	9,4 (10,4#)	6,5 (8,9#)			
6,0	HD		19,0# (19,0#)	12,9 (13,7#)	8,7 (10,9#)	6,2 (9,1#)	4,4 (6,0#)		
4,5	HD			11,3 (15,0#)	8,0 (11,5#)	5,8 (9,4#)	4,2 (7,4)		
3,0	HD			10,0 (15,7#)	7,2 (11,9#)	5,4 (9,3)	4,0 (7,2)		
1,5	HD			9,2 (15,3#)	6,7 (11,9#)	5,0 (9,0)	3,8 (7,0)		
0	HD			9,0 (14,1#)	6,4 (11,3#)	4,8 (8,7)	3,7 (6,8)		
- 1,5	HD		12,0# (12,0#)	9,1 (12,3#)	6,3 (10,2#)	4,7 (8,2#)	3,7 (6,1#)		
- 3,0	HD		9,8# (9,8#)	9,3 (9,9#)	6,5 (8,4#)	4,9 (6,6#)			
- 4,5	HD			6,7# (6,7#)	5,7# (5,7#)				
- 6,0	HD								
- 7,5	HD								
- 9,0	HD								
-10,5	HD								

Stick 2,90 m

Height (m)	Under-carriage	Radius of load from centerline of machine (m) 3,0	4,5	6,0	7,5	9,0	10,5	12,0	13,5
12,0	HD			6,8# (6,8#)					
10,5	HD				7,5# (7,5#)				
9,0	HD				9,3# (9,3#)	6,7 (7,0#)			
7,5	HD			10,8# (10,8#)	9,5 (9,8#)	6,6 (8,5#)	4,2# (4,2#)		
6,0	HD	28,4# (28,4#)	17,6# (17,6#)	13,0# (13,0#)	8,9 (10,4#)	6,3 (8,8#)	4,4 (7,6#)		
4,5	HD		18,2 (18,6#)	11,8 (14,4#)	8,1 (11,1#)	5,8 (9,1#)	4,2 (7,4)		
3,0	HD			10,3 (15,4#)	7,4 (11,7#)	5,4 (9,3#)	4,0 (7,1)		
1,5	HD			9,4 (15,5#)	6,7 (11,8#)	5,0 (8,9)	3,7 (6,9)		
0	HD		6,6# (6,6#)	9,0 (14,7#)	6,4 (11,5#)	4,7 (8,6)	3,6 (6,7)		
- 1,5	HD		12,0# (12,0#)	8,9 (13,1#)	6,2 (10,6#)	4,6 (8,4#)	3,5 (6,5#)		
- 3,0	HD		12,2# (12,2#)	9,1 (11,0#)	6,3 (9,0#)	4,7 (7,1#)	3,7 (4,9#)		
- 4,5	HD		8,5# (8,5#)	8,1# (8,1#)	6,5 (6,7#)	4,9# (4,9#)			
- 6,0	HD								
- 7,5	HD								
- 9,0	HD								
-10,5	HD								

Stick 3,80 m

Height (m)	Under-carriage	Radius of load from centerline of machine (m) 3,0	4,5	6,0	7,5	9,0	10,5	12,0	13,5
12,0	HD				5,0# (5,0#)				
10,5	HD				6,6# (6,6#)	4,9# (4,9#)			
9,0	HD				6,9# (6,9#)	6,4# (6,4#)	3,7# (3,7#)		
7,5	HD				7,5# (7,5#)	6,8 (7,3#)	4,7 (5,9#)		
6,0	HD			9,2# (9,2#)	9,1# (9,1#)	6,4 (8,1#)	4,5 (7,0#)	3,1 (3,4#)	
4,5	HD		18,7# (18,7#)	12,5 (13,3#)	8,5 (10,4#)	6,0 (8,5#)	4,3 (7,2#)	3,0 (5,2#)	
3,0	HD		11,7# (11,7#)	11,0 (14,7#)	7,6 (11,1#)	5,5 (8,9#)	4,0 (7,2)	2,9 (5,5)	
1,5	HD		6,6# (6,6#)	9,8 (15,4#)	6,9 (11,6#)	5,0 (9,0)	3,7 (6,9)	2,7 (5,3)	
0	HD		7,9# (7,9#)	9,1 (15,2#)	6,4 (11,6#)	4,7 (8,6)	3,5 (6,6)	2,6 (5,2)	
- 1,5	HD	5,9# (5,9#)	11,0# (11,0#)	8,8 (14,2#)	6,1 (11,0#)	4,5 (8,4)	3,4 (6,5)	2,6 (4,9#)	
- 3,0	HD	10,0# (10,0#)	14,7 (15,2#)	8,8 (12,5#)	6,1 (9,9#)	4,4 (7,8#)	3,4 (5,9#)		
- 4,5	HD		11,9# (11,9#)	9,1 (10,0#)	6,2 (8,0#)	4,5 (6,2#)	3,5 (4,1#)		
- 6,0	HD			6,6# (6,6#)	5,3# (5,3#)	3,4# (3,4#)			
- 7,5	HD								
- 9,0	HD								
-10,5	HD								

The load values are quoted in tons (t) on the backhoe bucket's load hook, and may be swung 360° on firm and even ground. Values quoted in brackets apply to the undercarriage when in longitudinal position. Capacities are valid for 600 mm wide triple grouser pads. Indicated loads are based on ISO 10567 standard and do not exceed 75 % of tipping or 87 % of hydraulic capacity (indicated via #). Maximum load for the backhoe bucket's lifting eye is 27 t. Without bucket (2,00 m³), the lift capacities will increase by 2250 kg, without bucket cylinder, link and lever they increase by an additional 750 kg. Lifting capacity of the excavator is limited by machine stability, hydraulic capacity and maximum permissible load of the load hook.

According to European Standard, EN 474-5: In the European Union excavators have to be equipped with an overload warning device, a load diagram and automatic check valves on the hoist cylinders, when they are used for lifting operations which require the use of lifting accessories.

Backhoe Attachment

with Gooseneck Boom 9,20 m and Heavy Duty Counterweight

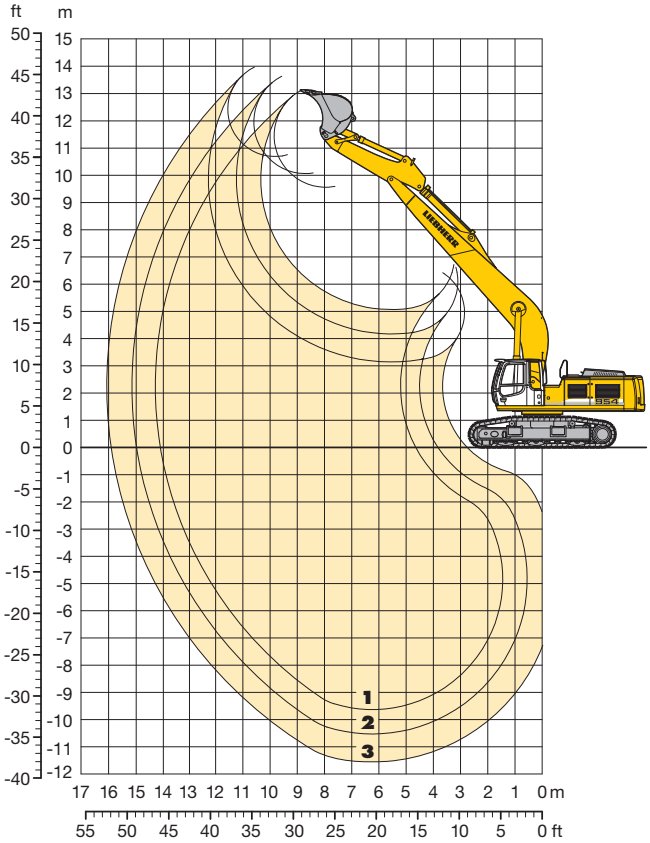

Digging Envelope

		1	2	3*
Stick lengths	m	2,90	3,80	5,00
Max. digging depth	m	9,65	10,55	11,60
Max. reach at ground level	m	14,10	14,95	15,90
Max. dump height	m	9,60	10,10	10,70
Max. teeth height	m	13,15	13,65	14,00
Digging force SAE	kN/t	206/21,0	173/17,6	145/14,8
Digging force ISO	kN/t	217/22,1	181/18,6	150/15,3
Breakout force SAE	kN/t	269/27,4	269/27,4	211/21,5
Breakout force ISO	kN/t	313/31,9	313/31,9	236/24,1

* with bucket R 944 C

Operating Weight and Ground Pressure

Operating weight includes basic machine with heavy duty counterweight, gooseneck boom 9,20 m, stick 3,80 m and bucket 1,65 m³.

Undercarriage		HD		
Pad width	mm	500	600	750
Weight	kg	52200	52700	54050
Ground pressure	kg/cm²	1,10	0,93	0,76

Buckets

Cutting width	mm	1300[1)]	1500[1)]	1700[1)]	1200[2)]	1350[2)]	1500[2)]	1650[2)]
Capacity ISO 7451	m³	1,65	2,00	2,35	1,25	1,50	1,75	2,00
Weight	kg	2100	2250	2500	1350	1450	1550	1675
Suitable for material up to a specific weight of								
with stick 2,90 m	t/m³	1,80	1,50	1,20	–	–	–	–
with stick 3,80 m	t/m³	1,80	1,20	–	–	–	–	–
with stick 5,00 m	t/m³	–	–	–	2,20	1,80	1,80	1,50

[1)] Medium-duty bucket with Liebherr teeth size 25 (appropriate for materials up to classification 5, according to VOB, Section C, DIN 18300)
[2)] Medium-duty bucket from R 944 C Litronic with teeth size 20

Lift Capacities

with Gooseneck Boom 9,20 m and Heavy Duty Counterweight

Stick 2,90 m

Height (m)	Under-carriage	Radius of load from centerline of machine (m) 3,0	4,5	6,0	7,5	9,0	10,5	12,0	13,5
12,0	HD								
10,5	HD								
9,0	HD						4,9# (4,9#)		
7,5	HD					5,4# (5,4#)	5,0# (5,0#)		
6,0	HD			9,2# (9,2#)	7,1# (7,1#)	6,0# (6,0#)	5,2 (5,3#)	3,8 (4,9#)	
4,5	HD			11,5# (11,5#)	8,3# (8,3#)	6,5 (6,6#)	4,9 (5,7#)	3,7 (5,1#)	
3,0	HD			7,6# (7,6#)	7,8 (9,4#)	5,9 (7,3#)	4,5 (6,1#)	3,5 (5,3#)	
1,5	HD			6,5# (6,5#)	7,2 (10,2#)	5,5 (7,9#)	4,2 (6,5#)	3,3 (5,6#)	
0	HD			9,6 (9,9#)	6,8 (10,6#)	5,2 (8,3#)	4,0 (6,8#)	3,1 (5,8#)	
- 1,5	HD			9,7 (13,9#)	6,7 (10,7#)	5,0 (8,5#)	3,9 (6,9#)	3,1 (5,8#)	
- 3,0	HD	9,5# (9,5#)	12,5# (12,5#)	9,8 (13,3#)	6,8 (10,5#)	5,0 (8,4#)	3,9 (6,8#)		
- 4,5	HD	14,6# (14,6#)	15,5# (15,5#)	10,1 (12,4#)	6,9 (9,9#)	5,1 (8,0#)	4,0 (6,4#)		
- 6,0	HD	17,3# (17,3#)	13,7# (13,7#)	10,6 (11,0#)	7,3 (8,9#)	5,4 (7,0#)			
- 7,5	HD		10,9# (10,9#)	8,8# (8,8#)	6,9# (6,9#)				
- 9,0	HD								
-10,5	HD								

Stick 3,80 m

Height (m)	Under-carriage	Radius of load from centerline of machine (m) 3,0	4,5	6,0	7,5	9,0	10,5	12,0	13,5
12,0	HD								
10,5	HD						4,1# (4,1#)		
9,0	HD						4,1# (4,1#)		
7,5	HD						4,3# (4,3#)	4,1 (4,1#)	
6,0	HD					5,2# (5,2#)	4,6# (4,6#)	3,9 (4,3#)	
4,5	HD			9,8# (9,8#)	7,3# (7,3#)	5,9# (5,9#)	5,0 (5,1#)	3,7 (4,5#)	2,7 (3,2#)
3,0	HD			11,2 (12,0#)	8,2 (8,5#)	6,1 (6,7#)	4,6 (5,6#)	3,5 (4,9#)	2,6 (4,3#)
1,5	HD			10,1 (11,2#)	7,4 (9,5#)	5,6 (7,4#)	4,2 (6,0#)	3,2 (5,2#)	2,4 (4,6#)
0	HD			9,6 (11,4#)	6,9 (10,2#)	5,2 (7,9#)	4,0 (6,4#)	3,0 (5,4#)	2,3 (4,0#)
- 1,5	HD		6,9# (6,9#)	9,5 (13,8#)	6,6 (10,5#)	4,9 (8,2#)	3,8 (6,7#)	2,9 (5,6#)	
- 3,0	HD	7,7# (7,7#)	10,7# (10,7#)	9,5 (13,8#)	6,6 (10,5#)	4,8 (8,3#)	3,7 (6,7#)	2,9 (5,5#)	
- 4,5	HD	11,4# (11,4#)	14,9# (14,9#)	9,7 (13,1#)	6,7 (10,2#)	4,9 (8,1#)	3,7 (6,5#)		
- 6,0	HD	15,5# (15,5#)	15,6# (15,6#)	10,1 (12,0#)	6,9 (9,4#)	5,1 (7,5#)	3,9 (5,9#)		
- 7,5	HD	17,8# (17,8#)	13,2# (13,2#)	10,3# (10,3#)	7,3 (8,1#)	5,4 (6,2#)			
- 9,0	HD		9,5# (9,5#)	7,4# (7,4#)	5,4# (5,4#)				
-10,5	HD								

Stick 5,00 m

Height (m)	Under-carriage	Radius of load from centerline of machine (m) 3,0	4,5	6,0	7,5	9,0	10,5	12,0	13,5
12,0	HD								
10,5	HD							2,8# (2,8#)	
9,0	HD							4,0# (4,0#)	
7,5	HD							4,1# (4,1#)	3,0# (3,0#)
6,0	HD						4,7# (4,7#)	4,4# (4,4#)	3,6 (4,2#)
4,5	HD					5,9# (5,9#)	5,2# (5,2#)	4,5 (4,7#)	3,4 (4,4#)
3,0	HD		7,1# (7,1#)	11,2# (11,2#)	8,4# (8,4#)	6,8# (6,8#)	5,4 (5,8#)	4,2 (5,1#)	3,3 (4,7#)
1,5	HD		4,5# (4,5#)	11,7 (13,1#)	8,6 (9,6#)	6,5 (7,6#)	5,0 (6,3#)	3,9 (5,5#)	3,1 (4,9#)
0	HD		5,5# (5,5#)	10,8 (14,0#)	7,9 (10,5#)	6,0 (8,3#)	4,7 (6,8#)	3,7 (5,8#)	2,9 (5,1#)
- 1,5	HD	4,4# (4,4#)	7,5# (7,5#)	10,4 (14,4#)	7,5 (11,1#)	5,7 (8,8#)	4,5 (7,2#)	3,5 (6,1#)	2,8 (5,2)
- 3,0	HD	7,1# (7,1#)	10,1# (10,1#)	10,3 (15,0#)	7,3 (11,4#)	5,5 (9,0#)	4,3 (7,4#)	3,4 (6,2)	2,8 (5,1#)
- 4,5	HD	9,9# (9,9#)	13,1# (13,1#)	10,3 (14,6#)	7,3 (11,3#)	5,5 (9,0#)	4,3 (7,4#)	3,4 (6,1#)	
- 6,0	HD	12,9# (12,9#)	16,8# (16,8#)	10,6 (13,8#)	7,4 (10,8#)	5,5 (8,7#)	4,3 (7,1#)	3,6 (5,7#)	
- 7,5	HD	16,6# (16,6#)	16,5# (16,5#)	10,9 (12,5#)	7,6 (9,9#)	5,7 (7,9#)	4,6 (6,2#)		
- 9,0	HD	18,9# (18,9#)	13,5# (13,5#)	10,4# (10,4#)	8,1 (8,2#)	6,2 (6,2#)			
-10,5	HD			6,8# (6,8#)					

The load values are quoted in tons (t) on the backhoe bucket's load hook, and may be swung 360° on firm and even ground. Values quoted in brackets apply to the undercarriage when in longitudinal position. Capacities are valid for 600 mm wide triple grouser pads. Indicated loads are based on ISO 10567 standard and do not exceed 75 % of tipping or 87 % of hydraulic capacity (indicated via #). Maximum load for the backhoe bucket's lifting eye is 27 t/20 t*. Without bucket (1,65 m^3/1,50 m^3*), the lift capacities will increase by 2100 kg/1450 kg*, without bucket cylinder, link and lever they increase by an additional 750 kg/600 kg*. Lifting capacity of the excavator is limited by machine stability, hydraulic capacity and maximum permissible load of the load hook.
According to European Standard, EN 474-5: In the European Union excavators have to be equipped with an overload warning device, a load diagram and automatic check valves on the hoist cylinders, when they are used for lifting operations which require the use of lifting accessories.
* Just for stick 5,00 m

Backhoe Attachment

with Gooseneck Boom HD 6,70 m

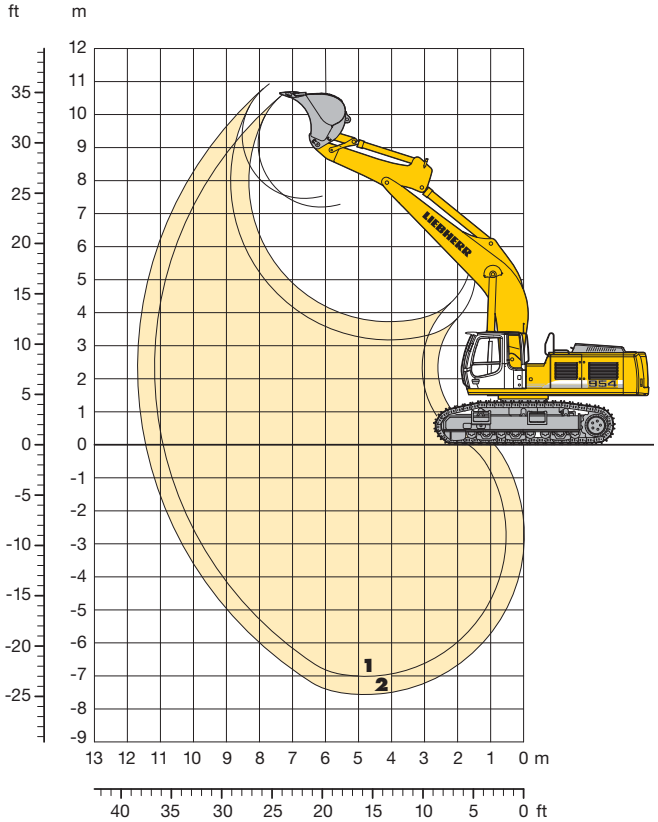

Digging Envelope

		1	2
Stick lengths	m	2,35	2,90
Max. digging depth	m	6,95	7,50
Max. reach at ground level	m	10,90	11,40
Max. dump height	m	7,20	7,45
Max. teeth height	m	10,60	10,90
Digging force SAE	kN/t	233/23,8	206/21,0
Digging force ISO	kN/t	248/25,8	217/22,1
Breakout force SAE	kN/t	269/27,4	269/27,4
Breakout force ISO	kN/t	313/31,9	313/31,9

Breakout force max. ISO 345/35,2 kN/t

Operating Weight and Ground Pressure

Operating weight includes basic machine with gooseneck boom HD 6,70 m, stick HD 2,35 m and bucket 2,00 m³.

Undercarriage		S-HD		
Pad width	mm	500	600	750
Weight	kg	54900	55550	56500
Ground pressure	kg/cm²	1,18	0,99	0,81

Optional: heavy duty counterweight
(Heavy duty counterweight increases the operating weight by 2000 kg and ground pressure by 0,04 kg/cm²)

Buckets

Cutting width	mm	1350[1)]	1550[1)]	1750[1)]	1950[1)]
Capacity ISO 7451	m³	1,65	2,00	2,35	2,70
Weight	kg	2500	2800	3050	3300
Suitable for material up to a specific weight of					
with stick 2,35 m	t/m³	2,20	2,20	2,20	1,80
with stick 2,90 m	t/m³	2,20	2,20	1,80	1,50

[1)] Heavy-duty rock bucket with Esco teeth size 61 (appropriate for materials above classification 6, according to VOB, Section C, DIN 18300)

Lift Capacities

with Gooseneck Boom HD 6,70 m

Stick 2,35 m

Height (m)	Under-carriage	Radius of load from centerline of machine (m) 3,0	4,5	6,0	7,5	9,0	10,5	12,0	13,5
12,0	S-HD								
10,5	S-HD								
9,0	S-HD								
7,5	S-HD				7,6# (7,6#)				
6,0	S-HD				8,1# (8,1#)	5,2# (5,2#)			
4,5	S-HD		14,9# (14,9#)	10,9# (10,9#)	9,0# (9,0#)	6,8 (8,0#)			
3,0	S-HD		19,4# (19,4#)	12,8 (13,0#)	8,9 (10,1#)	6,4 (8,6#)			
1,5	S-HD		18,0 (19,6#)	11,7 (14,7#)	8,3 (11,1#)	6,1 (9,1#)			
0	S-HD	9,5# (9,5#)	17,5 (22,1#)	11,1 (15,6#)	7,9 (11,8#)	5,8 (9,4#)			
- 1,5	S-HD	17,0# (17,0#)	17,5 (21,6#)	10,9 (15,6#)	7,7 (11,9#)				
- 3,0	S-HD	24,2# (24,2#)	17,9 (19,8#)	11,0 (14,7#)	7,8 (11,1#)				
- 4,5	S-HD	23,0# (23,0#)	16,7# (16,7#)	11,5 (12,4#)					
- 6,0	S-HD		10,5# (10,5#)						
- 7,5	S-HD								
- 9,0	S-HD								
-10,5	S-HD								

Stick 2,90 m

Height (m)	Under-carriage	Radius of load from centerline of machine (m) 3,0	4,5	6,0	7,5	9,0	10,5	12,0	13,5
12,0	S-HD								
10,5	S-HD								
9,0	S-HD								
7,5	S-HD								
6,0	S-HD				7,2# (7,2#)	6,7# (6,7#)			
4,5	S-HD			9,9# (9,9#)	8,3# (8,3#)	6,8 (7,4#)			
3,0	S-HD		17,7# (17,7#)	12,1# (12,1#)	9,0 (9,5#)	6,4 (8,0#)			
1,5	S-HD		18,6 (21,0#)	11,9 (14,0#)	8,3 (10,6#)	6,1 (8,7#)			
0	S-HD	9,5# (9,5#)	17,6 (22,0#)	11,2 (15,2#)	7,8 (11,4#)	5,8 (9,2#)			
- 1,5	S-HD	14,9# (14,9#)	17,4 (22,0#)	10,8 (15,6#)	7,6 (11,8#)	5,6 (9,2#)			
- 3,0	S-HD	20,8# (20,8#)	17,6 (20,7#)	10,8 (15,0#)	7,6 (11,4#)				
- 4,5	S-HD	26,1# (26,1#)	18,1# (18,1#)	11,2 (13,3#)	7,9 (9,7#)				
- 6,0	S-HD	18,6# (18,6#)	13,3# (13,3#)						
- 7,5	S-HD								
- 9,0	S-HD								
-10,5	S-HD								

The load values are quoted in tons (t) on the backhoe bucket's load hook, and may be swung 360° on firm and even ground. Values quoted in brackets apply to the undercarriage when in longitudinal position. Capacities are valid for 600 mm wide double grouser pads. Indicated loads are based on ISO 10567 standard and do not exceed 75 % of tipping or 87 % of hydraulic capacity (indicated via #). Maximum load for the backhoe bucket's lifting eye is 27 t. Without bucket (2,00 m³), the lift capacities will increase by 2800 kg, without bucket cylinder, link and lever they increase by an additional 750 kg. Lifting capacity of the excavator is limited by machine stability, hydraulic capacity and maximum permissible load of the load hook.

According to European Standard, EN 474-5: In the European Union excavators have to be equipped with an overload warning device, a load diagram and automatic check valves on the hoist cylinders, when they are used for lifting operations which require the use of lifting accessories.

Backhoe Attachment

with Gooseneck Boom HD 7,60 m

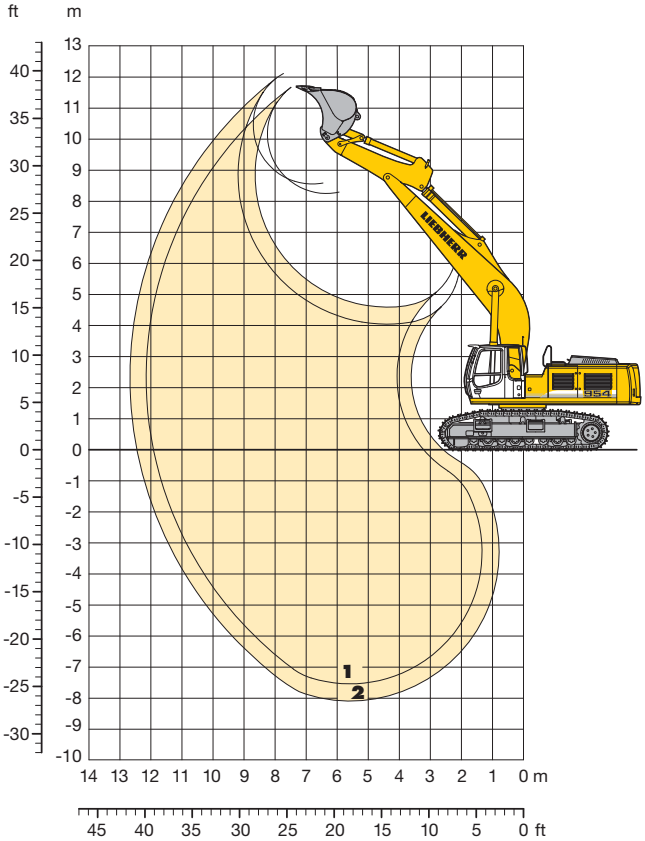

Digging Envelope

		1	2
Stick lengths	m	2,35	2,90
Max. digging depth	m	7,50	8,05
Max. reach at ground level	m	11,85	12,40
Max. dump height	m	8,25	8,55
Max. teeth height	m	11,80	12,15
Digging force SAE	kN/t	233/23,8	206/21,0
Digging force ISO	kN/t	248/25,8	217/22,1
Breakout force SAE	kN/t	269/27,4	269/27,4
Breakout force ISO	kN/t	313/31,9	313/31,9

Breakout force max. ISO 345/35,2 kN/t

Operating Weight and Ground Pressure

Operating weight includes basic machine with gooseneck boom HD 7,60 m, stick HD 2,35 m and bucket 2,00 m³.

Undercarriage		S-HD		
Pad width	mm	500	600	750
Weight	kg	55400	56050	57000
Ground pressure	kg/cm²	1,19	1,00	0,82

Optional: heavy duty counterweight
(Heavy duty counterweight increases the operating weight by 2000 kg and ground pressure by 0,04 kg/cm²)

Buckets

Cutting width	mm	1350[1)]	1550[1)]	1750[1)]
Capacity ISO 7451	m³	1,65	2,00	2,35
Weight	kg	2500	2800	3050
Suitable for material up to a specific weight of				
with stick 2,35 m	t/m³	2,20	1,80	1,80
with stick 2,90 m	t/m³	2,20	1,80	1,50

[1)] Heavy-duty rock bucket with Esco teeth size 61 (appropriate for materials above classification 6, according to VOB, Section C, DIN 18300)

Lift Capacities

with Gooseneck Boom HD 7,60 m

Stick 2,35 m

Height (m)	Under-carriage	Radius of load from centerline of machine (m) 3,0	4,5	6,0	7,5	9,0	10,5	12,0	13,5
12,0	S-HD								
10,5	S-HD								
9,0	S-HD								
7,5	S-HD				7,1# (7,1#)	6,6# (6,6#)			
6,0	S-HD				7,8# (7,8#)	6,9# (6,9#)			
4,5	S-HD		17,0# (17,0#)	11,3# (11,3#)	8,8# (8,8#)	7,3 (7,4#)	5,3 (5,4#)		
3,0	S-HD			13,0 (13,1#)	9,3 (9,8#)	6,9 (8,0#)	5,1 (6,8#)		
1,5	S-HD			11,9 (14,3#)	8,6 (10,6#)	6,4 (8,4#)	4,9 (7,1#)		
0	S-HD		11,3# (11,3#)	11,5 (14,6#)	8,2 (11,0#)	6,2 (8,7#)	4,8 (6,9#)		
- 1,5	S-HD	11,5# (11,5#)	18,1# (18,1#)	11,4 (14,3#)	8,1 (10,9#)	6,1 (8,6#)			
- 3,0	S-HD	18,2# (18,2#)	17,3# (17,3#)	11,6 (13,3#)	8,2 (10,3#)	6,2 (8,0#)			
- 4,5	S-HD	18,7# (18,7#)	14,7# (14,7#)	11,5# (11,5#)	8,5 (8,8#)				
- 6,0	S-HD		10,6# (10,6#)	8,2# (8,2#)					
- 7,5	S-HD								
- 9,0	S-HD								
-10,5	S-HD								

Stick 2,90 m

Height (m)	Under-carriage	Radius of load from centerline of machine (m) 3,0	4,5	6,0	7,5	9,0	10,5	12,0	13,5
12,0	S-HD								
10,5	S-HD								
9,0	S-HD					4,0# (4,0#)			
7,5	S-HD					6,0# (6,0#)			
6,0	S-HD				7,1# (7,1#)	6,3# (6,3#)	4,8# (4,8#)		
4,5	S-HD		15,1# (15,1#)	10,4# (10,4#)	8,2# (8,2#)	6,9# (6,9#)	5,4 (6,1#)		
3,0	S-HD		11,4# (11,4#)	12,3# (12,3#)	9,3# (9,3#)	6,9 (7,5#)	5,1 (6,5#)		
1,5	S-HD		8,7# (8,7#)	12,2 (13,8#)	8,7 (10,2#)	6,4 (8,1#)	4,8 (6,8#)		
0	S-HD		11,8# (11,8#)	11,6 (14,5#)	8,2 (10,8#)	6,1 (8,5#)	4,7 (6,9#)		
- 1,5	S-HD	10,1# (10,1#)	16,5# (16,5#)	11,4 (14,4#)	8,0 (10,9#)	5,9 (8,6#)	4,6 (6,8#)		
- 3,0	S-HD	15,4# (15,4#)	18,4# (18,4#)	11,4 (13,7#)	8,0 (10,5#)	6,0 (8,2#)			
- 4,5	S-HD	21,4# (21,4#)	16,1# (16,1#)	11,8 (12,2#)	8,2 (9,4#)				
- 6,0	S-HD	16,5# (16,5#)	12,5# (12,5#)	9,6# (9,6#)					
- 7,5	S-HD								
- 9,0	S-HD								
-10,5	S-HD								

The load values are quoted in tons (t) on the backhoe bucket's load hook, and may be swung 360° on firm and even ground. Values quoted in brackets apply to the undercarriage when in longitudinal position. Capacities are valid for 600 mm wide double grouser pads. Indicated loads are based on ISO 10567 standard and do not exceed 75 % of tipping or 87 % of hydraulic capacity (indicated via #). Maximum load for the backhoe bucket's lifting eye is 27 t. Without bucket (2,00 m^3), the lift capacities will increase by 2800 kg, without bucket cylinder, link and lever they increase by an additional 750 kg. Lifting capacity of the excavator is limited by machine stability, hydraulic capacity and maximum permissible load of the load hook.

According to European Standard, EN 474-5: In the European Union excavators have to be equipped with an overload warning device, a load diagram and automatic check valves on the hoist cylinders, when they are used for lifting operations which require the use of lifting accessories.

Lift Capacities

with Gooseneck Boom 6,70 m and Heavy Counterweight

Stick 2,35 m

Height (m)	Under-carriage	Radius of load from centerline of machine (m) 3,0	4,5	6,0	7,5	9,0	10,5	12,0	13,5
12,0	HD								
10,5	HD								
9,0	HD								
7,5	HD				8,1# (8,1#)				
6,0	HD				8,6# (8,6#)				
4,5	HD		15,6# (15,6#)	11,5# (11,5#)	9,6# (9,6#)	7,4 (8,6#)			
3,0	HD		20,4# (20,4#)	13,7 (13,7#)	9,6 (10,8#)	7,1 (9,2#)			
1,5	HD		19,4# (19,4#)	12,7 (15,5#)	9,1 (11,8#)	6,8 (9,7#)			
0	HD		19,0 (22,0#)	12,2 (16,5#)	8,7 (12,5#)	6,5 (10,1#)			
- 1,5	HD	17,2# (17,2#)	19,1 (22,7#)	12,0 (16,5#)	8,5 (12,6#)				
- 3,0	HD	24,6# (24,6#)	19,4 (20,9#)	12,1 (15,6#)	8,6 (11,9#)				
- 4,5	HD	24,2# (24,2#)	17,7# (17,7#)	12,6 (13,2#)					
- 6,0	HD		11,5# (11,5#)						
- 7,5	HD								
- 9,0	HD								
-10,5	HD								

Stick 2,90 m

Height (m)	Under-carriage	Radius of load from centerline of machine (m) 3,0	4,5	6,0	7,5	9,0	10,5	12,0	13,5
12,0	HD								
10,5	HD								
9,0	HD								
7,5	HD								
6,0	HD				7,8# (7,8#)	6,4# (6,4#)			
4,5	HD			10,4# (10,4#)	8,8# (8,8#)	7,4 (7,9#)			
3,0	HD		18,5# (18,5#)	12,8# (12,8#)	9,7 (10,1#)	7,1 (8,6#)			
1,5	HD		19,9 (22,1#)	12,9 (14,8#)	9,1 (11,3#)	6,7 (9,3#)			
0	HD	9,4# (9,4#)	19,1 (22,0#)	12,2 (16,1#)	8,7 (12,2#)	6,5 (9,8#)			
- 1,5	HD	15,0# (15,0#)	18,9 (23,2#)	11,9 (16,5#)	8,4 (12,5#)	6,3 (9,9#)			
- 3,0	HD	21,1# (21,1#)	19,1 (21,8#)	11,9 (15,9#)	8,4 (12,1#)				
- 4,5	HD	27,5# (27,5#)	19,2# (19,2#)	12,2 (14,2#)	8,7 (10,5#)				
- 6,0	HD	19,9# (19,9#)	14,3# (14,3#)						
- 7,5	HD								
- 9,0	HD								
-10,5	HD								

Stick 3,80 m

Height (m)	Under-carriage	Radius of load from centerline of machine (m) 3,0	4,5	6,0	7,5	9,0	10,5	12,0	13,5
12,0	HD								
10,5	HD								
9,0	HD								
7,5	HD					4,8# (4,8#)			
6,0	HD					6,2# (6,2#)	2,1# (2,1#)		
4,5	HD				7,5# (7,5#)	6,9# (6,9#)	4,2# (4,2#)		
3,0	HD	18,6# (18,6#)	15,3# (15,3#)	11,0# (11,0#)	8,9# (8,9#)	7,2 (7,7#)	5,3 (5,6#)		
1,5	HD	7,5# (7,5#)	19,9# (19,9#)	13,3 (13,4#)	9,3 (10,3#)	6,8 (8,5#)	5,0 (6,4#)		
0	HD	9,3# (9,3#)	19,5 (22,5#)	12,4 (15,2#)	8,7 (11,5#)	6,4 (9,2#)	4,8 (6,2#)		
- 1,5	HD	12,9# (12,9#)	18,9 (23,3#)	11,9 (16,2#)	8,4 (12,2#)	6,2 (9,7#)	3,6# (3,6#)		
- 3,0	HD	17,2# (17,2#)	18,9 (22,8#)	11,7 (16,2#)	8,2 (12,2#)	6,1 (9,6#)			
- 4,5	HD	22,7# (22,7#)	19,1 (21,1#)	11,8 (15,2#)	8,3 (11,5#)				
- 6,0	HD	25,9# (25,9#)	17,6# (17,6#)	12,2 (12,8#)					
- 7,5	HD		10,8# (10,8#)						
- 9,0	HD								
-10,5	HD								

The load values are quoted in tons (t) on the backhoe bucket's load hook, and may be swung 360° on firm and even ground. Values quoted in brackets apply to the undercarriage when in longitudinal position. Capacities are valid for 600 mm wide triple grouser pads. Indicated loads are based on ISO 10567 standard and do not exceed 75 % of tipping or 87 % of hydraulic capacity (indicated via #). Maximum load for the backhoe bucket's lifting eye is 27 t. Without bucket (2,35 m^3), the lift capacities will increase by 2500 kg, without bucket cylinder, link and lever they increase by an additional 750 kg. Lifting capacity of the excavator is limited by machine stability, hydraulic capacity and maximum permissible load of the load hook.

According to European Standard, EN 474-5: In the European Union excavators have to be equipped with an overload warning device, a load diagram and automatic check valves on the hoist cylinders, when they are used for lifting operations which require the use of lifting accessories.

Lift Capacities

with Gooseneck Boom 7,60 m and Heavy Counterweight

Stick 2,35 m

Height (m)	Under-carriage	Radius of load from centerline of machine (m) 3,0	4,5	6,0	7,5	9,0	10,5	12,0	13,5
12,0	HD								
10,5	HD								
9,0	HD								
7,5	HD				7,9# (7,9#)	6,6# (6,6#)			
6,0	HD				8,6# (8,6#)	7,5 (7,7#)			
4,5	HD		18,4# (18,4#)	12,3# (12,3#)	9,7# (9,7#)	7,2 (8,2#)			
3,0	HD			12,6 (14,3#)	9,1 (10,8#)	6,8 (8,8#)	5,1 (7,3#)		
1,5	HD			11,7 (15,5#)	8,5 (11,6#)	6,4 (9,4#)	4,9 (7,9#)		
0	HD		10,9# (10,9#)	11,3 (15,9#)	8,2 (12,1#)	6,2 (9,7#)			
- 1,5	HD	11,5# (11,5#)	18,2 (18,2#)	11,3 (15,6#)	8,0 (12,1#)	6,1 (9,6#)			
- 3,0	HD	18,7# (18,7#)	18,5 (18,7#)	11,4 (14,6#)	8,1 (11,4#)	6,2 (8,9#)			
- 4,5	HD	20,4# (20,4#)	16,2# (16,2#)	11,8 (12,7#)	8,4 (9,9#)				
- 6,0	HD		12,0# (12,0#)	9,3# (9,3#)					
- 7,5	HD								
- 9,0	HD								
-10,5	HD								

Stick 2,90 m

Height (m)	Under-carriage	Radius of load from centerline of machine (m) 3,0	4,5	6,0	7,5	9,0	10,5	12,0	13,5
12,0	HD								
10,5	HD								
9,0	HD								
7,5	HD					6,7# (6,7#)			
6,0	HD				7,9# (7,9#)	7,1# (7,1#)	4,3# (4,3#)		
4,5	HD		16,1# (16,1#)	11,3# (11,3#)	9,0# (9,0#)	7,2 (7,7#)	5,3 (6,9#)		
3,0	HD		11,2# (11,2#)	12,9 (13,4#)	9,2 (10,2#)	6,8 (8,4#)	5,1 (7,3#)		
1,5	HD		8,4# (8,4#)	11,9 (15,0#)	8,6 (11,2#)	6,4 (9,0#)	4,9 (7,6#)		
0	HD		11,8# (11,8#)	11,4 (15,7#)	8,1 (11,8#)	6,1 (9,4#)	4,7 (7,8#)		
- 1,5	HD	10,3# (10,3#)	16,8# (16,8#)	11,2 (15,7#)	7,9 (12,0#)	6,0 (9,5#)	4,7 (7,1#)		
- 3,0	HD	15,9# (15,9#)	18,2 (19,9#)	11,2 (15,0#)	7,9 (11,6#)	6,0 (9,1#)			
- 4,5	HD	21,9# (21,9#)	17,6# (17,6#)	11,5 (13,5#)	8,1 (10,4#)				
- 6,0	HD	18,2# (18,2#)	13,9# (13,9#)	10,7# (10,7#)					
- 7,5	HD								
- 9,0	HD								
-10,5	HD								

Stick 3,80 m

Height (m)	Under-carriage	Radius of load from centerline of machine (m) 3,0	4,5	6,0	7,5	9,0	10,5	12,0	13,5
12,0	HD								
10,5	HD								
9,0	HD								
7,5	HD					5,7# (5,7#)	4,0# (4,0#)		
6,0	HD					6,2# (6,2#)	5,6 (5,8#)		
4,5	HD				7,9# (7,9#)	6,8# (6,8#)	5,4 (6,2#)		
3,0	HD		17,7# (17,7#)	11,9# (11,9#)	9,2# (9,2#)	6,9 (7,6#)	5,1 (6,6#)	3,3# (3,3#)	
1,5	HD		13,0# (13,0#)	12,3 (13,9#)	8,7 (10,4#)	6,5 (8,4#)	4,9 (7,1#)	3,6# (3,6#)	
0	HD	4,9# (4,9#)	12,6# (12,6#)	11,5 (15,2#)	8,2 (11,3#)	6,1 (9,0#)	4,6 (7,4#)		
- 1,5	HD	8,8# (8,8#)	15,3# (15,3#)	11,1 (15,6#)	7,9 (11,8#)	5,8 (9,3#)	4,5 (7,6#)		
- 3,0	HD	12,8# (12,8#)	17,9 (19,5#)	11,0 (15,4#)	7,7 (11,7#)	5,8 (9,2#)	4,5 (7,3#)		
- 4,5	HD	17,4# (17,4#)	18,2 (19,4#)	11,2 (14,4#)	7,8 (11,1#)	5,8 (8,6#)			
- 6,0	HD	23,1# (23,1#)	16,6# (16,6#)	11,5 (12,5#)	8,1 (9,5#)				
- 7,5	HD		11,9# (11,9#)	8,8# (8,8#)					
- 9,0	HD								
-10,5	HD								

The load values are quoted in tons (t) on the backhoe bucket's load hook, and may be swung 360° on firm and even ground. Values quoted in brackets apply to the undercarriage when in longitudinal position. Capacities are valid for 600 mm wide triple grouser pads. Indicated loads are based on ISO 10567 standard and do not exceed 75 % of tipping or 87 % of hydraulic capacity (indicated via #). Maximum load for the backhoe bucket's lifting eye is 27 t. Without bucket (2,00 m³), the lift capacities will increase by 2250 kg, without bucket cylinder, link and lever they increase by an additional 750 kg. Lifting capacity of the excavator is limited by machine stability, hydraulic capacity and maximum permissible load of the load hook.

According to European Standard, EN 474-5: In the European Union excavators have to be equipped with an overload warning device, a load diagram and automatic check valves on the hoist cylinders, when they are used for lifting operations which require the use of lifting accessories.

Lift Capacities

with Gooseneck Boom 8,00 m and Heavy Counterweight

Stick 2,35 m

Height (m)	Under-carriage	Radius of load from centerline of machine (m) 3,0	4,5	6,0	7,5	9,0	10,5	12,0	13,5
12,0	HD								
10,5	HD			10,5# (10,5#)					
9,0	HD			11,9# (11,9#)	10,1# (10,1#)				
7,5	HD			12,6# (12,6#)	10,4# (10,4#)	7,4 (8,9#)			
6,0	HD		19,0# (19,0#)	13,7# (13,7#)	10,0 (10,9#)	7,2 (9,1#)	5,2 (6,0#)		
4,5	HD			13,0 (15,0#)	9,2 (11,5#)	6,7 (9,4#)	5,0 (7,9#)		
3,0	HD			11,6 (15,7#)	8,5 (11,9#)	6,3 (9,6#)	4,8 (7,9#)		
1,5	HD			10,9 (15,3#)	7,9 (11,9#)	6,0 (9,5#)	4,6 (7,7#)		
0	HD			10,6 (14,1#)	7,6 (11,3#)	5,8 (9,1#)	4,5 (7,2#)		
- 1,5	HD		12,0# (12,0#)	10,7 (12,3#)	7,5 (10,2#)	5,7 (8,2#)	4,5 (6,1#)		
- 3,0	HD		9,8# (9,8#)	9,9# (9,9#)	7,7 (8,4#)	5,8 (6,6#)			
- 4,5	HD			6,7# (6,7#)	5,7# (5,7#)				
- 6,0	HD								
- 7,5	HD								
- 9,0	HD								
-10,5	HD								

Stick 2,90 m

Height (m)	Under-carriage	Radius of load from centerline of machine (m) 3,0	4,5	6,0	7,5	9,0	10,5	12,0	13,5
12,0	HD			6,8# (6,8#)					
10,5	HD				7,5# (7,5#)				
9,0	HD				9,3# (9,3#)	7,0# (7,0#)			
7,5	HD			10,8# (10,8#)	9,8# (9,8#)	7,5 (8,5#)	4,2# (4,2#)		
6,0	HD	28,4# (28,4#)	17,6# (17,6#)	13,0# (13,0#)	10,1 (10,4#)	7,2 (8,8#)	5,2 (7,6#)		
4,5	HD		18,6# (18,6#)	13,4 (14,4#)	9,3 (11,1#)	6,8 (9,1#)	5,0 (7,7#)		
3,0	HD			12,0 (15,4#)	8,6 (11,7#)	6,3 (9,3#)	4,8 (7,7#)		
1,5	HD			11,0 (15,5#)	8,0 (11,8#)	6,0 (9,4#)	4,6 (7,6#)		
0	HD		6,6# (6,6#)	10,6 (14,7#)	7,6 (11,5#)	5,7 (9,1#)	4,4 (7,3#)		
- 1,5	HD		12,0# (12,0#)	10,6 (13,1#)	7,4 (10,6#)	5,6 (8,4#)	4,3 (6,5#)		
- 3,0	HD		12,2# (12,2#)	10,7 (11,0#)	7,5 (9,0#)	5,6 (7,1#)	4,5 (4,9#)		
- 4,5	HD		8,5# (8,5#)	8,1# (8,1#)	6,7# (6,7#)	4,9# (4,9#)			
- 6,0	HD								
- 7,5	HD								
- 9,0	HD								
-10,5	HD								

Stick 3,80 m

Height (m)	Under-carriage	Radius of load from centerline of machine (m) 3,0	4,5	6,0	7,5	9,0	10,5	12,0	13,5
12,0	HD				5,0# (5,0#)				
10,5	HD				6,6# (6,6#)	4,9# (4,9#)			
9,0	HD				6,9# (6,9#)	6,4# (6,4#)	3,7# (3,7#)		
7,5	HD				7,5# (7,5#)	7,3# (7,3#)	5,5 (5,9#)		
6,0	HD			9,2# (9,2#)	9,1# (9,1#)	7,4 (8,1#)	5,4 (7,0#)	3,4# (3,4#)	
4,5	HD		18,7# (18,7#)	13,3# (13,3#)	9,7 (10,4#)	6,9 (8,5#)	5,1 (7,2#)	3,7 (5,2#)	
3,0	HD		11,7# (11,7#)	12,6 (14,7#)	8,8 (11,1#)	6,5 (8,9#)	4,8 (7,4#)	3,6 (6,2#)	
1,5	HD		6,6# (6,6#)	11,4 (15,4#)	8,1 (11,6#)	6,0 (9,2#)	4,5 (7,5#)	3,4 (6,1#)	
0	HD		7,9# (7,9#)	10,7 (15,2#)	7,6 (11,6#)	5,7 (9,1#)	4,3 (7,3#)	3,3 (5,8#)	
- 1,5	HD	5,9# (5,9#)	11,0# (11,0#)	10,5 (14,2#)	7,3 (11,0#)	5,4 (8,7#)	4,2 (6,9#)	3,3 (4,9#)	
- 3,0	HD	10,0# (10,0#)	15,2# (15,2#)	10,5 (12,5#)	7,3 (9,9#)	5,4 (7,8#)	4,2 (5,9#)		
- 4,5	HD		11,9# (11,9#)	10,0# (10,0#)	7,4 (8,0#)	5,5 (6,2#)	4,1# (4,1#)		
- 6,0	HD			6,6# (6,6#)	5,3# (5,3#)	3,4# (3,4#)			
- 7,5	HD								
- 9,0	HD								
-10,5	HD								

The load values are quoted in tons (t) on the backhoe bucket's load hook, and may be swung 360° on firm and even ground. Values quoted in brackets apply to the undercarriage when in longitudinal position. Capacities are valid for 600 mm wide triple grouser pads. Indicated loads are based on ISO 10567 standard and do not exceed 75 % of tipping or 87 % of hydraulic capacity (indicated via #). Maximum load for the backhoe bucket's lifting eye is 27 t. Without bucket (2,00 m^3), the lift capacities will increase by 2250 kg, without bucket cylinder, link and lever they increase by an additional 750 kg. Lifting capacity of the excavator is limited by machine stability, hydraulic capacity and maximum permissible load of the load hook.
According to European Standard, EN 474-5: In the European Union excavators have to be equipped with an overload warning device, a load diagram and automatic check valves on the hoist cylinders, when they are used for lifting operations which require the use of lifting accessories.

Lift Capacities

with Gooseneck Boom HD 6,70 m and Heavy Counterweight

Stick 2,35 m

Height (m)	Under-carriage	Radius of load from centerline of machine (m) 3,0	4,5	6,0	7,5	9,0	10,5	12,0	13,5
12,0	S-HD								
10,5	S-HD								
9,0	S-HD								
7,5	S-HD				7,6# (7,6#)				
6,0	S-HD				8,1# (8,1#)	5,2# (5,2#)			
4,5	S-HD		14,9# (14,9#)	10,9# (10,9#)	9,0# (9,0#)	7,8 (8,0#)			
3,0	S-HD		19,4# (19,4#)	13,0# (13,0#)	10,1 (10,1#)	7,4 (8,6#)			
1,5	S-HD		19,6# (19,6#)	13,3 (14,7#)	9,5 (11,1#)	7,0 (9,1#)			
0	S-HD	9,5# (9,5#)	20,0 (22,1#)	12,7 (15,6#)	9,1 (11,8#)	6,8 (9,4#)			
- 1,5	S-HD	17,0# (17,0#)	20,0 (21,6#)	12,5 (15,6#)	8,9 (11,9#)				
- 3,0	S-HD	24,2# (24,2#)	19,8# (19,8#)	12,7 (14,7#)	9,0 (11,1#)				
- 4,5	S-HD	23,0# (23,0#)	16,7# (16,7#)	12,4# (12,4#)					
- 6,0	S-HD		10,5# (10,5#)						
- 7,5	S-HD								
- 9,0	S-HD								
-10,5	S-HD								

Stick 2,90 m

Height (m)	Under-carriage	Radius of load from centerline of machine (m) 3,0	4,5	6,0	7,5	9,0	10,5	12,0	13,5
12,0	S-HD								
10,5	S-HD								
9,0	S-HD								
7,5	S-HD								
6,0	S-HD				7,2# (7,2#)	6,7# (6,7#)			
4,5	S-HD			9,9# (9,9#)	8,3# (8,3#)	7,4# (7,4#)			
3,0	S-HD		17,7# (17,7#)	12,1# (12,1#)	9,5# (9,5#)	7,4 (8,0#)			
1,5	S-HD		21,0# (21,0#)	13,6 (14,0#)	9,6 (10,6#)	7,0 (8,7#)			
0	S-HD	9,5# (9,5#)	20,1 (22,0#)	12,8 (15,2#)	9,1 (11,4#)	6,7 (9,2#)			
- 1,5	S-HD	14,9# (14,9#)	19,9 (22,0#)	12,5 (15,6#)	8,8 (11,8#)	6,6 (9,2#)			
- 3,0	S-HD	20,8# (20,8#)	20,1 (20,7#)	12,5 (15,0#)	8,8 (11,4#)				
- 4,5	S-HD	26,1# (26,1#)	18,1# (18,1#)	12,8 (13,3#)	9,1 (9,7#)				
- 6,0	S-HD	18,6# (18,6#)	13,3# (13,3#)						
- 7,5	S-HD								
- 9,0	S-HD								
-10,5	S-HD								

The load values are quoted in tons (t) on the backhoe bucket's load hook, and may be swung 360° on firm and even ground. Values quoted in brackets apply to the undercarriage when in longitudinal position. Capacities are valid for 600 mm wide double grouser pads. Indicated loads are based on ISO 10567 standard and do not exceed 75 % of tipping or 87 % of hydraulic capacity (indicated via #). Maximum load for the backhoe bucket's lifting eye is 27 t. Without bucket (2,00 m³), the lift capacities will increase by 2800 kg, without bucket cylinder, link and lever they increase by an additional 750 kg. Lifting capacity of the excavator is limited by machine stability, hydraulic capacity and maximum permissible load of the load hook.

According to European Standard, EN 474-5: In the European Union excavators have to be equipped with an overload warning device, a load diagram and automatic check valves on the hoist cylinders, when they are used for lifting operations which require the use of lifting accessories.

Lift Capacities

with Gooseneck Boom HD 7,60 m and Heavy Counterweight

Stick 2,35 m

Height (m)	Under-carriage	Radius of load from centerline of machine (m) 3,0	4,5	6,0	7,5	9,0	10,5	12,0	13,5
12,0	S-HD								
10,5	S-HD								
9,0	S-HD								
7,5	S-HD				7,1# (7,1#)	6,6# (6,6#)			
6,0	S-HD				7,8# (7,8#)	6,9# (6,9#)			
4,5	S-HD		17,0# (17,0#)	11,3# (11,3#)	8,8# (8,8#)	7,3 (7,4#)	5,3 (5,4#)		
3,0	S-HD			13,0 (13,1#)	9,3 (9,8#)	6,9 (8,0#)	5,1 (6,8#)		
1,5	S-HD			11,9 (14,3#)	8,6 (10,6#)	6,4 (8,4#)	4,9 (7,1#)		
0	S-HD		11,3# (11,3#)	11,5 (14,6#)	8,2 (11,0#)	6,2 (8,7#)	4,8 (6,9#)		
- 1,5	S-HD	11,5# (11,5#)	18,1# (18,1#)	11,4 (14,3#)	8,1 (10,9#)	6,1 (8,6#)			
- 3,0	S-HD	18,2# (18,2#)	17,3# (17,3#)	11,6 (13,3#)	8,2 (10,3#)	6,2 (8,0#)			
- 4,5	S-HD	18,7# (18,7#)	14,7# (14,7#)	11,5# (11,5#)	8,5 (8,8#)				
- 6,0	S-HD		10,6# (10,6#)	8,2# (8,2#)					
- 7,5	S-HD								
- 9,0	S-HD								
-10,5	S-HD								

Stick 2,90 m

Height (m)	Under-carriage	Radius of load from centerline of machine (m) 3,0	4,5	6,0	7,5	9,0	10,5	12,0	13,5
12,0	S-HD								
10,5	S-HD								
9,0	S-HD					4,0# (4,0#)			
7,5	S-HD					6,0# (6,0#)			
6,0	S-HD				7,1# (7,1#)	6,3# (6,3#)	4,8# (4,8#)		
4,5	S-HD		15,1# (15,1#)	10,4# (10,4#)	8,2# (8,2#)	6,9# (6,9#)	5,4 (6,1#)		
3,0	S-HD		11,4# (11,4#)	12,3# (12,3#)	9,3# (9,3#)	6,9 (7,5#)	5,1 (6,5#)		
1,5	S-HD		8,7# (8,7#)	12,2 (13,8#)	8,7 (10,2#)	6,4 (8,1#)	4,8 (6,8#)		
0	S-HD		11,8# (11,8#)	11,6 (14,5#)	8,2 (10,8#)	6,1 (8,5#)	4,7 (6,9#)		
- 1,5	S-HD	10,1# (10,1#)	16,5# (16,5#)	11,4 (14,4#)	8,0 (10,9#)	5,9 (8,6#)	4,6 (6,8#)		
- 3,0	S-HD	15,4# (15,4#)	18,4# (18,4#)	11,4 (13,7#)	8,0 (10,5#)	6,0 (8,2#)			
- 4,5	S-HD	21,4# (21,4#)	16,1# (16,1#)	11,8 (12,2#)	8,2 (9,4#)				
- 6,0	S-HD	16,5# (16,5#)	12,5# (12,5#)	9,6# (9,6#)					
- 7,5	S-HD								
- 9,0	S-HD								
-10,5	S-HD								

The load values are quoted in tons (t) on the backhoe bucket's load hook, and may be swung 360° on firm and even ground. Values quoted in brackets apply to the undercarriage when in longitudinal position. Capacities are valid for 600 mm wide double grouser pads. Indicated loads are based on ISO 10567 standard and do not exceed 75 % of tipping or 87 % of hydraulic capacity (indicated via #). Maximum load for the backhoe bucket's lifting eye is 27 t. Without bucket (2,00 m^3), the lift capacities will increase by 2800 kg, without bucket cylinder, link and lever they increase by an additional 750 kg. Lifting capacity of the excavator is limited by machine stability, hydraulic capacity and maximum permissible load of the load hook.
According to European Standard, EN 474-5: In the European Union excavators have to be equipped with an overload warning device, a load diagram and automatic check valves on the hoist cylinders, when they are used for lifting operations which require the use of lifting accessories.

Equipment

Undercarriage	s	o
Two-stage travel motors	•	
Three track guide per track	•	
Lifetime lubricated track rollers	•	
Tracks sealed and greased	•	
Idler protection	•	
Pads 600 mm	•	
Pads 500 mm		•
Pads 750 mm		•
Different undercarriage versions		•
Four track guide		•
Streng. bottom sheet center part		•
Renforced cover		•

Uppercarriage	s	o
Lockable tool box	•	
Handrails, non slip surfaces	•	
Tool kit	•	
Maintenance-free swing brake lock	•	
Maintenance-free HD-batteries	•	
Main switch for electric circuit	•	
Sound insulation	•	
Electric fuel tank filler pump		•
Foot pedal swing positioning brake		•
Customized colors		•

Hydraulics	s	o
Electronic pump regulation	•	
Stepless work mode selector	•	
Pressure storage for controlled lowering of attachments with engine turned off	•	
Filter with integrated fine filter area (5 µm)	•	
Pressure test ports	•	
Leakage filter	•	
Liebherr Tool Control	•	
Hydraulic tank shut-off valve	•	
Pressure compensation	•	
Flow compensation	•	
Additional hydraulic circuits	•	
Bio-degradable hydr. oil		•
Filter for secondary circuit		•

Engine	s	o
After-cooled	•	
Unit pump system	•	
Turbo charger	•	
Dry-type air cleaner w/pre-cleaner, main and safety element	•	
Air filter with automatic dust ejector	•	
Two hydrostatic fans	•	
Sensor controlled engine idling	•	
Fuel water separator	•	
Conform with standard level IIIA/Tier 3	•	
Engine cold starting aid		•

Operator's Cab	s	o
Load bearing sectional profile structure, covered with deep-drawn panels	•	
Roof right window and windshield armored	•	
All tinted windows	•	
Right window made of one piece (without post)	•	
Door with sliding window	•	
Rain hood over front window opening	•	
Wiper/washer	•	
Emergecy exit rear window	•	
Sun roller blind	•	
Seat and consoles independently adjustable (6-way adjustable seat)	•	
Storage tray	•	
Closed storage space	•	
Cloth hook	•	
Removable customized foot mat	•	
Dome light	•	
Inside rear mirror	•	
Cigarette lighter and ashtray	•	
Seat belt	•	
Mechanical hour meters, readable from outside the cab	•	
Displays for engine operating condition	•	
Automatic air conditioning with defroster	•	
Preparation for radio installation	•	
Stereo radio		•
Electric cool box		•
Sun visor		
Auxiliary heating		•
Additional flood lights		•
Wiper for lower window		
Roof window wiper		•
Bullet proof window (fixed installation – can not be opened)		•
FOPS Protection		•
Air pressure operator seat with heating and head-rest		•
Electronic drive away lock		•
Beacon		•
Extinguisher		•

Attachment	s	o
Semi-automatic central lubrication system (except link and tilt geometry)	•	
Cylinders with shock absorbers	•	
ReGeneration plus	•	
SAE split flanges on all high pressure lines	•	
Work light on boom	•	
Sealed pivots/O-ring sealant between bucket and stick	•	
27 t lifting eye on buckets or on quick change coupler	•	
Automatic central lubrication system (except link and tilt geometry)		•
Central lubrication for lever with protection cover		•
Bucket kinematics sealed up completely		•
Overload warning device		•
Hydr. or mechanical quick change coupler		•
Likufix		•
Piston rod protection		•
Hydraulic lines for additional tools		•
Quick disconnect hose couplers for additional tools		•
Liebherr line of buckets		•
Special application buckets		•
Customized colors		•

S = Standard, O = Option

Options and/or special attachments, supplied by vendors other than Liebherr, are only to be installed with the knowledge and approval of Liebherr to retain warranty.

All illustrations and data may differ from standard equipment. Subject to change without notice. All indicated loads are based in accordance with ISO 9248.

The Liebherr Group of Companies

Wide product range

The Liebherr Group is one of the largest construction equipment manufacturers in the world. Liebherr's high-value products and services enjoy a high reputation in many other fields, too. The wide range includes domestic appliances, aerospace and transportation systems, machine tools and maritime cranes.

Exceptional customer benefit

Every product line provides a complete range of models in many different versions. With both its technical excellence and acknowledged quality, Liebherr products offer a maximum of customer benefits in practical application.

State-of-the-art technology

To provide consistent, top quality products, Liebherr attaches great importance to each product area, its components and core technologies. Important modules and components are developed and manufactured in-house, for instance the entire drive and control technology for construction equipment.

Worldwide and independent

Hans Liebherr founded the Liebherr family company in 1949. Since that time, the enterprise has steadily grown to a Group of 100 companies with over 30,000 employees located on all continents. The corporate headquarters of the Group is Liebherr-International AG in Bulle, Switzerland. The Liebherr family is the sole owner of the company.

www.liebherr.com

Printed in Germany by Eberl RG-BK-RP LFR/SP 10100618-2-07.08

Liebherr-France SAS
2, avenue Joseph Rey, B.P. 90287, F-68005 Colmar Cedex
☎ +33 389 21 30 30, Fax +33 389 21 37 93
www.liebherr.com, E-Mail: info.lfr@liebherr.com

Machine for Industrial Applications R 954 C

Litronic®

Operating Weight: 62,350 – 70,400 kg
Engine Output: 240 kW / 326 HP

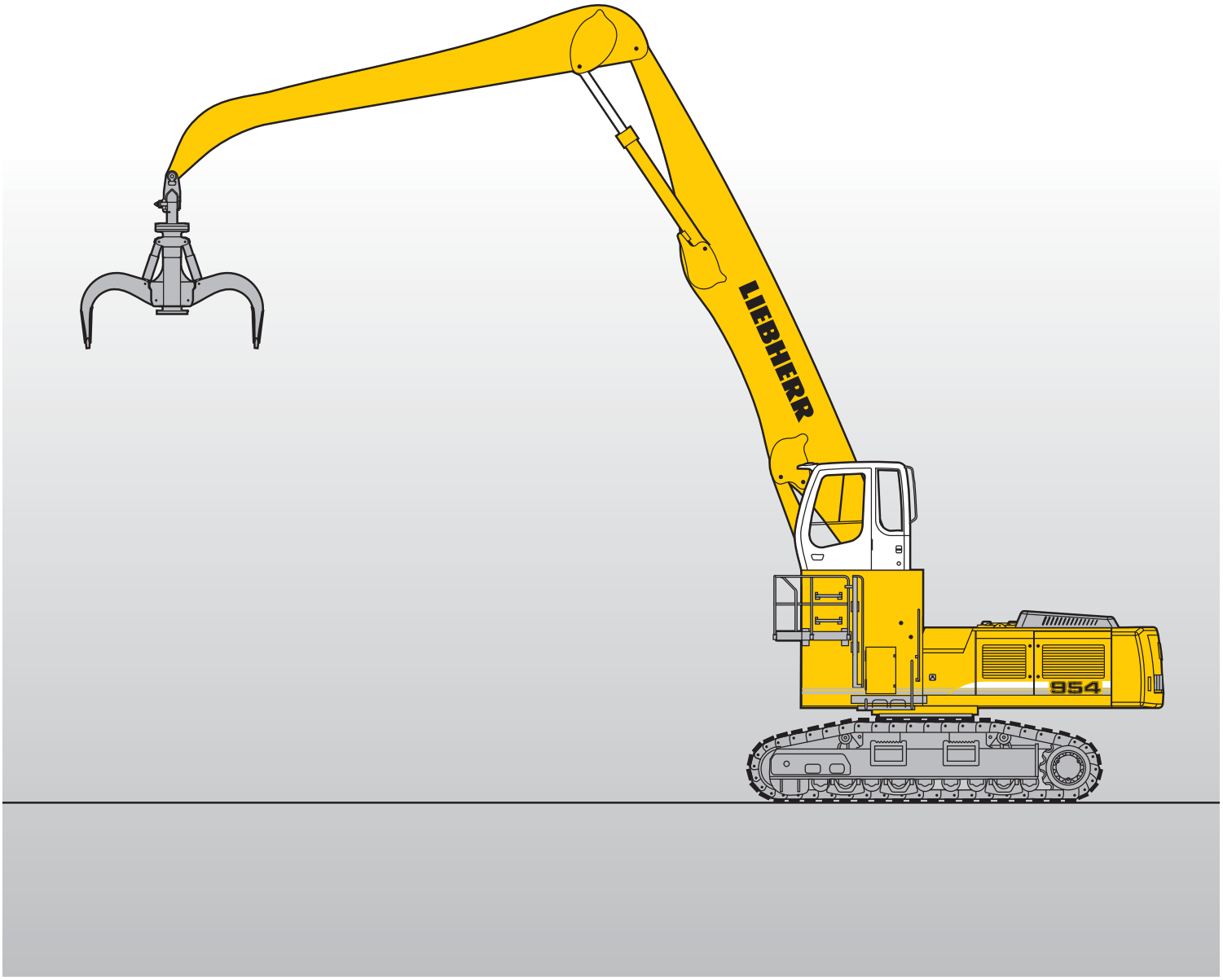

LIEBHERR

Technical Data

Engine

Rating per ISO 9249	240 kW (326 HP) at 1800 RPM
Model	Liebherr D 936 L
Type	6 cylinder in-line
Bore/Stroke	122/150 mm
Displacement	10,5 l
Engine operation	4-stroke diesel unit pump system turbo-charged and after-cooled
Cooling	water-cooled and integrated motor oil cooler
Air cleaner	dry-type air cleaner with pre-cleaner, primary and safety elements, automatic dust discharge
Fuel tank	700 l
Standard	sensor controlled engine idling
Electrical system	
Voltage	24 V
Batteries	2 x 170 Ah/12 V
Starter	24 V/7,8 kW
Alternator	three phase current 28 V/80 A

Hydraulic System

Hydraulic pump for attachment and travel drive	two Liebherr variable flow, swash plate pumps
Max. flow	2 x 350 l/min.
Max. pressure	350 bar
Pump regulation	electro-hydraulic with electronic engine speed sensing regulation, pressure compensation, flow compensation, automatic oil flow optimizer
Hydraulic pump for swing drive	reversible, variable flow, swash plate pump, closed-loop circuit
Max. flow	211 l/min.
Max. pressure	384 bar
Hydraulic tank	440 l
Hydraulic system	790 l
Hydraulic oil filter	2 full flow filters in return line with integrated fine filter area (5 µm)
Hydraulic oil cooler	cooler unit, consisting of radiator for engine coolant with after-cooler core, sandwiched with cooler for hydraulic fluid and fuel with hydrostatically controlled fan drives
MODE selection	adjustment of machine performance and the hydraulics via a mode selector to match application
ECO	for especially economical and environmentally friendly operation
POWER	for maximum digging power and heavy duty jobs
LIFT	for lifting
FINE	for precision work and lifting through very sensitive movements
R.P.M. adjustment	stepless adjustment of engine output via the r.p.m. at each selected mode

Hydraulic Controls

Power distribution	via control valves in single block with integrated safety valves
Flow summation	to boom and stick
Closed-loop circuit	for uppercarriage swing drive
Servo circuit	
Attachment and swing	proportional via joystick levers
Travel	proportional via foot pedal
Additional functions	via foot pedals or joystick push buttons

Swing Drive

Drive by	Liebherr swash plate motor with integrated brake valves
Transmission	Liebherr compact planetary reduction gear
Swing ring	Liebherr, sealed single race ball bearing swing ring, internal teeth
Swing speed	0 – 6,0 RPM stepless
Swing torque	154 kNm
Holding brake	wet multi-disc (spring applied, pressure released)
Option	pedal controlled positioning brake

Operator's Cab

Cab	resiliently mounted, sound insulated, tinted windows, front window stores overhead, door with sliding window
Operator's seat	fully adjustable, shockabsorbing suspension, adjustable to operator's weight and size, 6-way adjustable Liebherr seat
Joysticks	integrated into adjustable consoles
Monitoring	menu driven query of current operating conditions via the LCD display. Automatic monitoring, display, warning (acoustical and optical signal) and saving machine data, for example, engine overheating, low engine oil pressure or low hydraulic oil level
Air conditioning	standard air conditioning, combined cooler/heater, additional dust filter in fresh air/recirculated
Noise emission	
ISO 6396	L_{pA} (inside cab) = 75 dB(A)
2000/14/EC	L_{WA} (surround noise) = 105 dB(A)

Undercarriage

Versions:	
HD-W	heavy duty, wide gauge
EW	special duty, extra wide gauge
Drive	Liebherr swash plate motors with integrated brake valves on both sides
Transmission	Liebherr planetary reduction gears
Travel speed	HD-W: low range – 3,4 km high range – 5,0 km/h EW: low range – 2,7 km high range – 3,8 km/h
Drawbar pull max.	HD-W: 404 kN EW: 536 kN
Track components	HD-W: D 7 E, maintenance-free EW: D 8 K, maintenance-free
Track rollers/ Carrier rollers	HD-W: 10/2 EW: 9/2
Tracks	sealed and greased
Track pads	HD-W: triple grouser EW: double grouser
Digging locks	wet multi-discs (spring applied, pressure released)
Brake valves	integrated into travel motor

Attachment

Type	High-strength steel plates at highly-stressed points for the toughest requirements. Complex and stable mountings of attachment and cylinders. Unrivalled strength, even at high loads
Hydraulic cylinders	Liebherr cylinders with special seal system. Shock absorption
Pivots	sealed, low maintenance
Lubrication	Liebherr semi-automatic central lubrication system

Dimensions

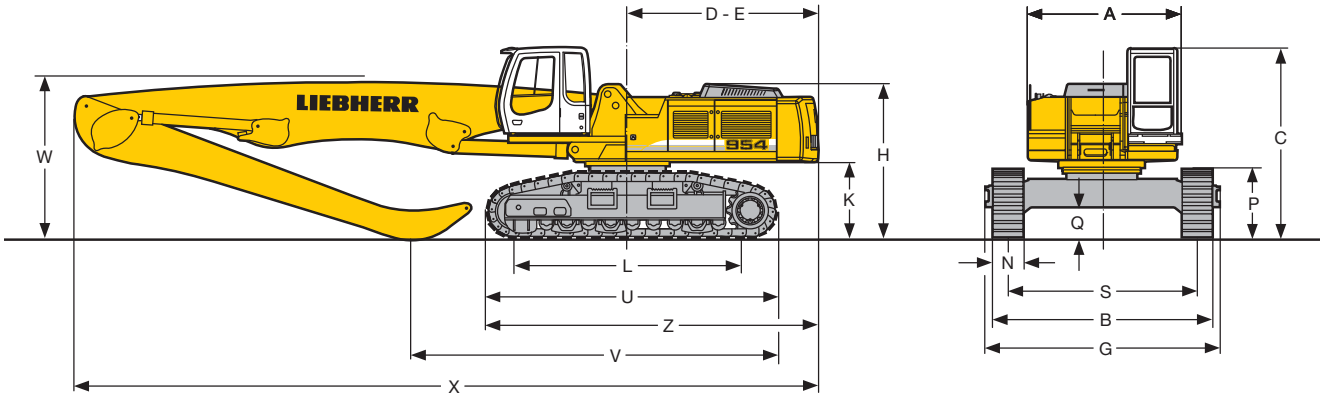

	HD-W	mm	EW	mm
A		3070		3070
C		3660		3805
D		3825		3825
E		2930		3825
H		2930		3075
K		1345		1490
L		4400		4545
P		1170		1355
Q		477		604
S		3400		3800
U		5380		5680
N	600	750	600	750
B	4012	4150	4490	4550
G	4220	4220	4717	4717
Z		6500		6675

E = Tail radius

Industrial-Type Straight Boom 10,50 m and Industrial Stick with Undercarriage	m	7,80	
		HD-W	EW
V	mm	7200	7050
W	mm	3550	3300
X	mm	14950	14950

Industrial-Type Straight Boom 11,50 m and Industrial Stick with Undercarriage	m	7,80	9,00
		EW	
V	mm	8350	7250
W	mm	3550	4050
X	mm	15950	15950

Industrial-Type Gooseneck Boom 10,50 m and Industrial Stick with Undercarriage	m	7,80	
		HD-W	EW
V	mm	6900	7050
W	mm	3850	4000
X	mm	14850	14850

Industrial-Type Gooseneck Boom 11,50 m and Industrial Stick with Undercarriage	m	7,80	9,00
		EW	
V	mm	8050	6900
W	mm	4200	4200
X	mm	15800	15800

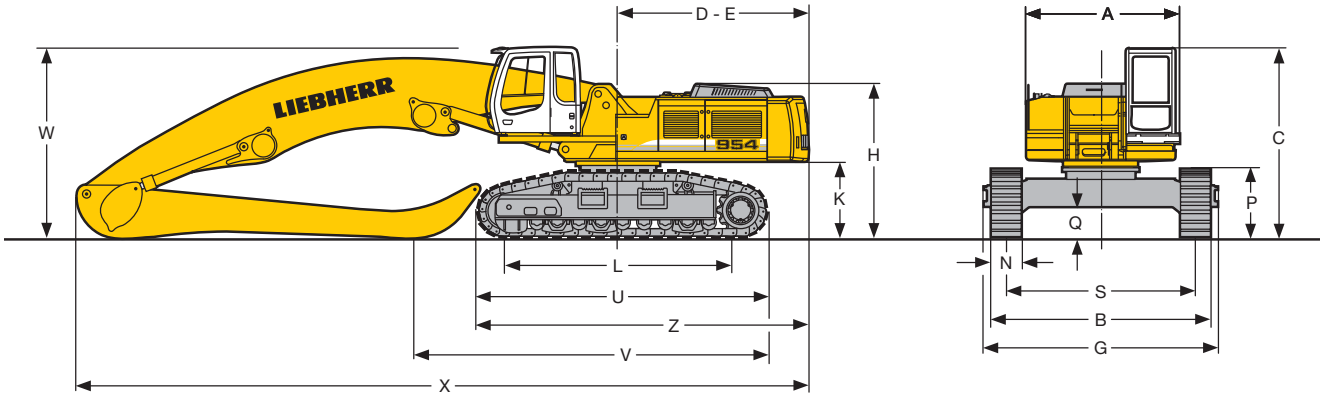

VarioLiftPlus

Variable Boom Mounting Positions for Optimised Lift Capacities

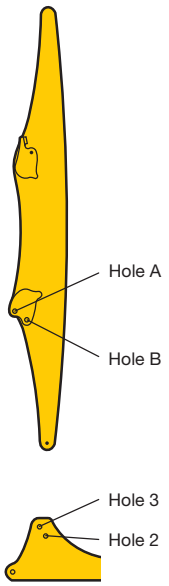

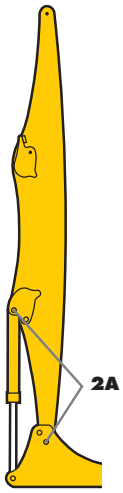

Version **2A**

with **the same** working range

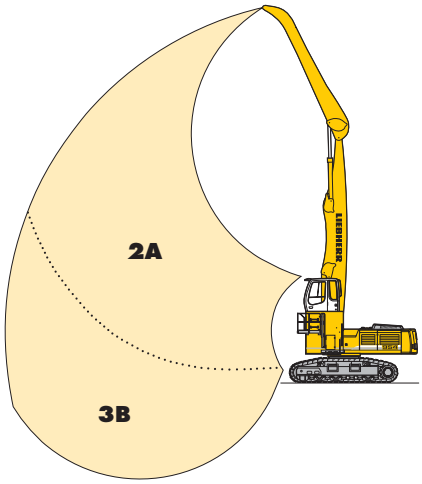

Kinematic variant 2A:
Increased lift capacities above ground level
Kinematic variant 3B:
Increased lift capacities below ground level and when working at large outreach

with a **different** working range

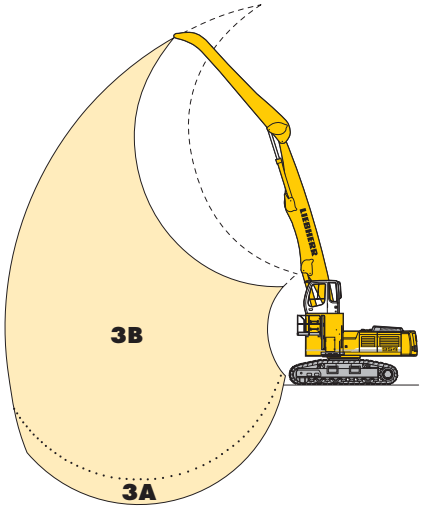

Kinematic variant 3A:
Altered range curve with additional reach depth, e.g. for unloading from ships

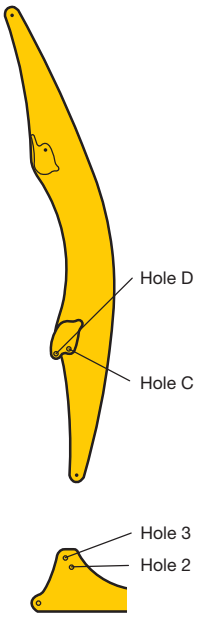

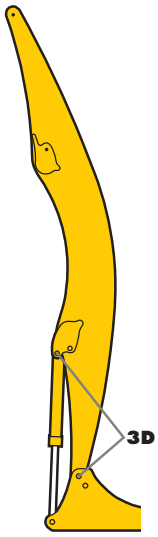

Version **3D**

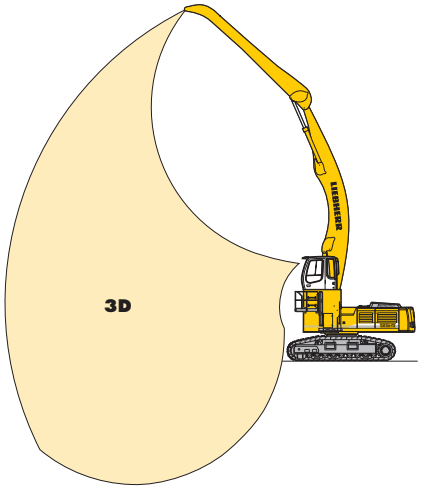

Kinematic variant 3D:
Increased lift capacities below ground level and when working at large outreach

with a **different** working range

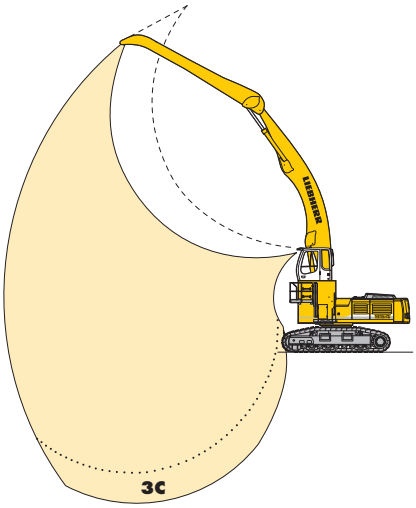

Kinematic variant 3C:
Altered range curve with additional reach depth, e.g. for unloading from ships

Industrial Attachment

with Industrial-Type Straight Boom 10,50 m

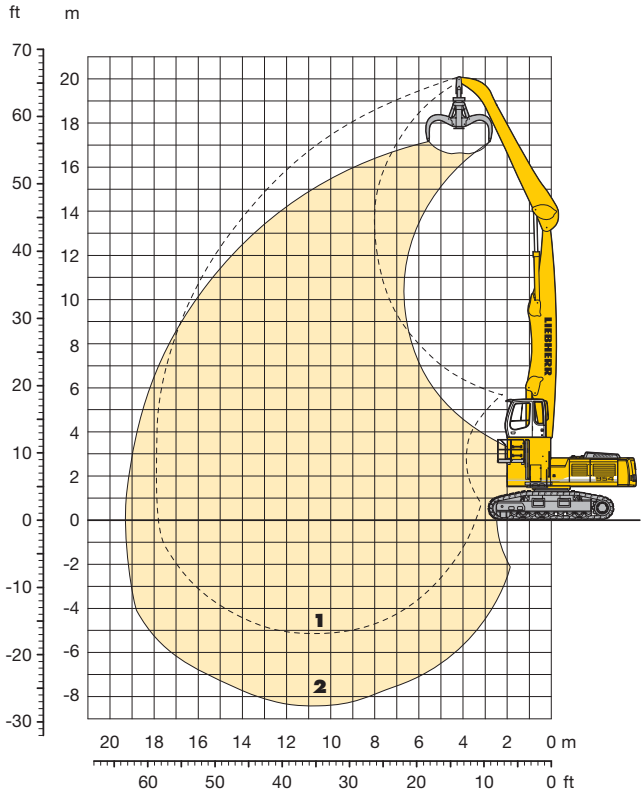

Attachment Envelope

Kinematic variant 2A

1 with industrial stick 7,80 m
2 with industrial stick 7,80 m and grapple model 72 C

Operating Weight and Ground Pressure

Operating weight includes basic machine with rigid cab elevation and counterweight 14,5 t, industrial-type straight boom 10,50 m, industrial stick 7,80 m and grapple model 72 C with 5 semi-closed tines 1,20 m³.

Undercarriage		HD-W		EW	
Pad width	mm	600	750	600	750
Weight	kg	62350	63600	68600	69600
Ground pressure	kg/cm²	1,05	0,86	1,15	0,94

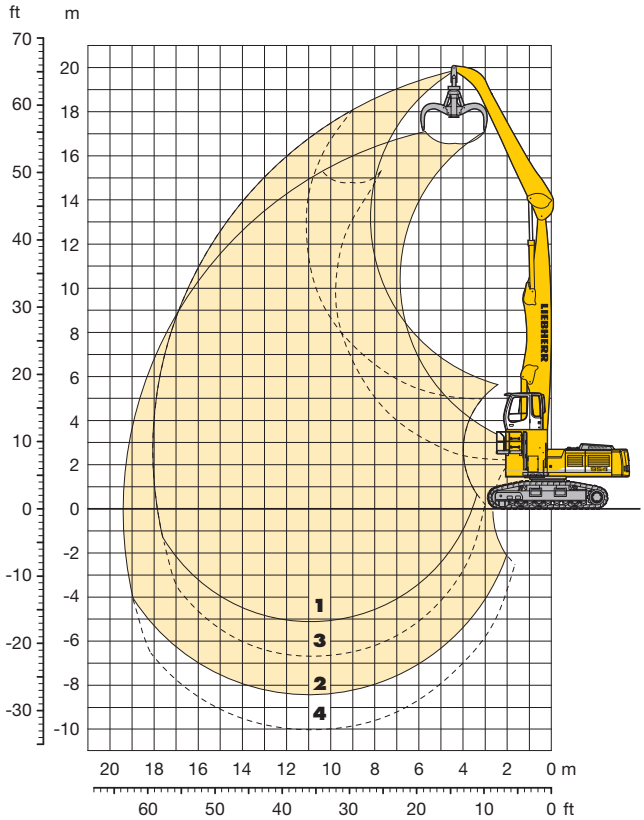

Attachment Envelope

Kinematic variants 3A/3B

1 with industrial stick 7,80 m (3B)
2 with industrial stick 7,80 m and grapple model 72 C (3B)
3 with industrial stick 7,80 m (3A)
4 with industrial stick 7,80 m and grapple model 72 C (3A)

Lift Capacities

with Industrial-Type Straight Boom 10,50 m

Industrial Stick 7,80 m (Variant 2A)

Height (m)	Under-carriage	Radius of load from centerline of machine (m) 4,5	6,0	7,5	9,0	10,5	12,0	13,5	15,0	16,5	18,0	19,5
21,0	EW											
	HD-W											
19,5	EW	16,8# (16,8#)										
	HD-W	16,6# (16,6#)										
18,0	EW		16,1# (16,1#)	14,1# (14,1#)								
	HD-W		16,0# (16,0#)	13,9# (13,9#)								
16,5	EW		16,6# (16,6#)	15,5# (15,5#)	13,9# (13,9#)	11,6# (11,6#)						
	HD-W		16,6# (16,6#)	15,4# (15,4#)	13,8# (13,8#)	11,0 (11,2#)						
15,0	EW			16,0# (16,0#)	14,0# (14,0#)	12,3# (12,3#)	10,9 (11,0#)					
	HD-W			16,0# (16,0#)	14,0# (14,0#)	11,4 (12,3#)	8,7 (10,9)					
13,5	EW			16,0# (16,0#)	13,8# (13,8#)	12,2# (12,2#)	10,9# (10,9#)	8,8 (9,8#)				
	HD-W			16,0# (16,0#)	13,8# (13,8#)	11,6 (12,2#)	9,0 (10,9#)	7,0 (8,8)				
12,0	EW			16,0# (16,0#)	13,8# (13,8#)	12,2# (12,2#)	10,9# (10,9#)	8,9 (9,7#)	7,1 (8,2)			
	HD-W			16,0# (16,0#)	13,8# (13,8#)	11,6 (12,2#)	9,0 (10,9#)	7,1 (8,9)	5,6 (7,1)			
10,5	EW			16,2# (16,2#)	14,0# (14,0#)	12,3# (12,3#)	10,9# (10,9#)	8,8 (9,7#)	7,2 (8,2)			
	HD-W			16,2# (16,2#)	13,9# (13,9#)	11,4 (12,2#)	8,9 (10,9#)	7,1 (8,9)	5,6 (7,2)			
9,0	EW		16,5# (16,5#)	16,6# (16,6#)	14,2# (14,2#)	12,4# (12,4#)	10,7 (10,9#)	8,7 (9,7#)	7,1 (8,2)	5,8 (6,8)		
	HD-W		16,4# (16,4#)	16,5# (16,5#)	14,2# (14,2#)	11,1 (12,4#)	8,7 (10,8)	6,9 (8,7)	5,6 (7,1)	4,5 (5,8)		
7,5	EW	14,8# (14,8#)	18,1# (18,1#)	17,2# (17,2#)	14,5# (14,5#)	12,6# (12,6#)	10,4 (11,0#)	8,5 (9,7)	7,0 (8,0)	5,8 (6,7)		
	HD-W	14,7# (14,7#)	17,8# (17,8#)	17,1# (17,1#)	13,8 (14,5#)	10,6 (12,5#)	8,4 (10,5)	6,7 (8,5)	5,4 (7,0)	4,4 (5,8)		
6,0	EW	19,5# (19,5#)	22,2# (22,2#)	17,8# (17,8#)	14,9# (14,9#)	12,5 (12,7#)	10,0 (11,1#)	8,2 (9,4)	6,8 (7,9)	5,7 (6,6)		
	HD-W	18,4# (18,4#)	22,0# (22,0#)	17,5 (17,7#)	13,0 (14,8#)	10,0 (12,6)	8,0 (10,1)	6,5 (8,2)	5,3 (6,8)	4,3 (5,7)		
4,5	EW	31,7# (31,7#)	23,2# (23,2#)	18,3# (18,3#)	15,0 (15,1#)	11,8 (12,8#)	9,6 (11,0)	7,9 (9,1)	6,6 (7,7)	5,6 (6,5)		
	HD-W	31,4# (31,4#)	22,7 (23,1#)	16,0 (18,3#)	12,0 (15,1#)	9,4 (12,0)	7,6 (9,6)	6,2 (7,9)	5,1 (6,6)	4,2 (5,5)		
3,0	EW	5,5# (5,5#)	23,6# (23,6#)	18,3 (18,5#)	14,0 (15,2#)	11,2 (12,8#)	9,1 (10,6)	7,6 (8,8)	6,4 (7,4)	5,4 (6,4)		
	HD-W	6,3# (6,3#)	20,0 (23,7#)	14,5 (18,5#)	11,1 (14,3)	8,8 (11,3)	7,1 (9,2)	5,8 (7,6)	4,9 (6,4)	4,1 (5,4)		
1,5	EW	3,1# (3,1#)	12,2# (12,2#)	17,0 (18,2#)	13,1 (14,9#)	10,6 (12,3)	8,7 (10,1)	7,3 (8,5)	6,2 (7,2)	5,3 (6,2)		
	HD-W	3,2# (3,2#)	13,0# (13,0#)	13,1 (17,4)	10,2 (13,4)	8,2 (10,7)	6,7 (8,7)	5,6 (7,3)	4,7 (6,2)	3,9 (5,3)		
0	EW	3,6# (3,6#)	9,3# (9,3#)	16,0 (17,1#)	12,4 (14,2#)	10,1 (11,8)	8,3 (9,8)	7,0 (8,2)	6,0 (7,1)	5,2 (5,8#)		
	HD-W	3,5# (3,5#)	9,4# (9,4#)	12,1 (16,3)	9,5 (12,6)	7,7 (10,1)	6,3 (8,4)	5,3 (7,0)	4,5 (6,0)	3,8 (5,2)		
-1,5	EW	4,8# (4,8#)	9,2# (9,2#)	15,4 (15,4#)	11,9 (13,0#)	9,7 (11,0#)	8,1 (9,3#)	6,8 (7,9#)	5,9 (6,5#)	5,0# (5,0#)		
	HD-W	4,7# (4,7#)	9,1# (9,1#)	11,5 (15,7)	9,0 (12,1)	7,3 (9,7)	6,1 (8,1)	5,1 (6,8)	4,4 (5,9)	3,8 (5,1#)		
-3,0	EW		10,0# (10,0#)	13,1# (13,1#)	11,3# (11,3#)	9,5 (9,7#)	7,9 (8,2#)	6,7 (6,8#)	5,4# (5,4#)			
	HD-W		9,9# (9,9#)	11,2 (13,4#)	8,7 (11,5#)	7,1 (9,5)	5,9 (7,9)	5,0 (6,7)	4,3 (5,5#)			
-4,5	EW				9,1# (9,1#)	7,9# (7,9#)	6,6# (6,6#)					
	HD-W				8,6 (9,4#)	7,0 (8,1#)	5,8 (6,8#)					
-6,0	EW											
	HD-W											
-7,5	EW											
	HD-W											
-9,0	EW											
	HD-W											

Industrial Stick 7,80 m (Variant 3A)

Height (m)	Under-carriage	Radius of load from centerline of machine (m) 4,5	6,0	7,5	9,0	10,5	12,0	13,5	15,0	16,5	18,0	19,5
21,0	EW											
	HD-W											
19,5	EW											
	HD-W											
18,0	EW				12,2# (12,2#)							
	HD-W				11,8# (11,8#)							
16,5	EW					11,6# (11,6#)						
	HD-W					11,0 (11,6#)						
15,0	EW					11,2# (11,2#)	10,4# (10,4#)					
	HD-W					11,2# (11,2#)	8,8 (10,4#)					
13,5	EW					11,0# (11,0#)	10,2# (10,2#)	8,8 (9,5#)				
	HD-W					11,0# (11,0#)	8,9 (10,2#)	7,0 (8,8)				
12,0	EW					11,1# (11,1#)	10,2# (10,2#)	8,8 (9,4#)	7,1 (8,2)			
	HD-W					11,0# (11,0#)	8,9 (10,2#)	7,1 (8,8)	5,6 (7,1)			
10,5	EW					11,2# (11,2#)	10,2# (10,2#)	8,8 (9,4#)	7,1 (8,2)			
	HD-W					11,2# (11,2#)	8,8 (10,2#)	7,0 (8,8)	5,6 (7,1)			
9,0	EW				12,9# (12,9#)	11,5# (11,5#)	10,4# (10,4#)	8,6 (9,5#)	7,0 (8,1)	5,8 (6,7)		
	HD-W				12,8# (12,8#)	10,9 (11,5#)	8,6 (10,4#)	6,8 (8,6)	5,5 (7,0)	4,4 (5,8)		
7,5	EW			15,6# (15,6#)	13,5# (13,5#)	11,9# (11,9#)	10,3 (10,7#)	8,4 (9,6)	6,9 (8,0)	5,7 (6,7)		
	HD-W				13,4# (13,4#)	10,4 (11,9#)	8,2 (10,4)	6,6 (8,4)	5,4 (6,9)	4,4 (5,7)		
6,0	EW		20,6# (20,6#)	16,8# (16,8#)	14,2# (14,2#)	12,3 (12,4#)	9,9 (11,0#)	8,1 (9,3)	6,7 (7,8)	5,6 (6,5)		
	HD-W		20,4# (20,4#)	16,6# (16,6#)	12,7 (14,1#)	9,9 (12,3#)	7,8 (9,9)	6,3 (8,1)	5,2 (6,7)	4,3 (5,6)		
4,5	EW	31,3# (31,3#)	22,7# (22,7#)	18,0# (18,0#)	14,7 (14,9#)	11,6 (12,8#)	9,4 (10,9)	7,8 (9,0)	6,5 (7,6)	5,5 (6,4)		
	HD-W	30,9# (30,9#)	22,0 (22,5#)	15,6 (17,8#)	11,8 (14,9#)	9,2 (11,8)	7,4 (9,5)	6,0 (7,8)	5,0 (6,5)	4,1 (5,5)		
3,0	EW	3,8# (3,8#)	23,0# (23,0#)	17,9 (19,0#)	13,7 (15,6#)	10,9 (12,7)	8,9 (10,4)	7,4 (8,7)	6,3 (7,3)	5,3 (6,3)	4,6 (5,4)	
	HD-W	4,2# (4,2#)	19,3 (24,3#)	14,0 (18,4)	10,8 (14,0)	8,6 (11,1)	6,9 (9,0)	5,7 (7,5)	4,8 (6,3)	4,0 (5,3)	3,4 (4,5)	
1,5	EW	2,6# (2,6#)	10,2# (10,2#)	16,5 (19,6#)	12,8 (15,1)	10,3 (12,1)	8,5 (10,0)	7,1 (8,4)	6,1 (7,1)	5,2 (6,1)	4,5 (5,4)	
	HD-W	2,6# (2,6#)	10,6# (10,6#)	12,7 (17,0)	9,9 (13,1)	8,0 (10,4)	6,5 (8,6)	5,4 (7,2)	4,6 (6,1)	3,9 (5,2)	3,3 (4,5)	
0	EW	3,4# (3,4#)	8,4# (8,4#)	15,6 (18,6)	12,2 (14,4)	9,8 (11,6)	8,2 (9,6)	6,9 (8,1)	5,9 (6,9)	5,1 (6,0)		
	HD-W	3,3# (3,3#)	8,5# (8,5#)	11,8 (15,9)	9,2 (12,3)	7,5 (9,9)	6,2 (8,2)	5,2 (6,9)	4,4 (5,9)	3,8 (5,1)		
-1,5	EW	4,7# (4,7#)	8,7# (8,7#)	15,1 (16,9#)	11,7 (13,9)	9,5 (11,2)	7,9 (9,3)	6,7 (7,9)	5,8 (6,8)	5,0 (6,0)		
	HD-W	4,6# (4,6#)	8,6# (8,6#)	11,2 (15,3)	8,8 (11,8)	7,1 (9,6)	5,9 (7,9)	5,0 (6,7)	4,3 (5,7)	3,7 (5,0)		
-3,0	EW		9,7# (9,7#)	14,8 (16,4#)	11,5 (13,6)	9,3 (11,0)	7,7 (9,2)	6,6 (7,8)	5,7 (6,8)	5,0 (6,0)		
	HD-W	6,1# (6,1#)	9,5# (9,5#)	10,9 (15,0)	8,5 (11,6)	6,9 (9,3)	5,7 (7,7)	4,9 (6,6)	4,2 (5,7)	3,7 (5,0)		
-4,5	EW			14,8 (16,0#)	11,4 (13,6)	9,2 (10,9)	7,7 (9,1)	6,6 (7,8)	5,7 (6,8)			
	HD-W		10,8# (10,8#)	10,9 (15,0)	8,4 (11,5)	6,8 (9,2)	5,7 (7,7)	4,8 (6,5)	4,2 (5,7)			
-6,0	EW					9,3 (10,2#)	7,7 (8,6#)					
	HD-W				8,5 (11,5)	6,8 (9,3)	5,7 (7,7)					
-7,5	EW											
	HD-W											
-9,0	EW											
	HD-W											

The lift capacities are stated in metric tonnes (t) on the lifting gear's stick tip, and can be lifted 360° on firm, level supporting surface. Values quoted in brackets are valid for the undercarriage when in longitudinal position. Capacities are valid for 600 mm wide triple grouser pads. Indicated loads are based on ISO 10567 standard and do not exceed 75 % of tipping or 87 % of hydraulic capacity (indicated via #). Lifting capacity of the excavator is limited by machine stability, hydraulic capacity and maximum permissible load of the load hook.
According to European Standard, EN 474-5: In the European Union excavators have to be equipped with an overload warning device, a load diagram and automatic check valves on the hoist cylinders, when they are used for lifting operations which require the use of lifting accessories.

Lift Capacities

with Industrial-Type Straight Boom 10,50 m

Industrial Stick 7,80 m (Variant 3B)

Height (m)	Under-carriage	Radius of load from centerline of machine (m)										
		4,5	6,0	7,5	9,0	10,5	12,0	13,5	15,0	16,5	18,0	19,5
21,0	EW											
	HD-W											
19,5	EW	17,4# (17,4#)	14,7# (14,7#)									
	HD-W	17,2# (17,2#)										
18,0	EW		15,4# (15,4#)	13,4# (13,4#)	12,1# (12,1#)							
	HD-W	17,9# (17,9#)	15,6# (15,6#)	13,5# (13,5#)	11,8# (11,8#)							
16,5	EW		14,4# (14,4#)	12,5# (12,5#)	11,3# (11,3#)	10,4# (10,4#)						
	HD-W		14,5# (14,5#)	12,6# (12,6#)	11,3# (11,3#)	10,5# (10,5#)						
15,0	EW			12,0# (12,0#)	10,9# (10,9#)	10,0# (10,0#)	9,4# (9,4#)					
	HD-W			12,1# (12,1#)	10,9# (10,9#)	10,1# (10,1#)	8,8 (9,5#)					
13,5	EW			11,8# (11,8#)	10,7# (10,7#)	9,9# (9,9#)	9,2# (9,2#)	8,7# (8,7#)				
	HD-W			11,8# (11,8#)	10,7# (10,7#)	9,9# (9,9#)	9,0 (9,2#)	7,0 (8,8#)				
12,0	EW			11,9# (11,9#)	10,8# (10,8#)	9,9# (9,9#)	9,2# (9,2#)	8,6# (8,6#)	7,1 (8,2)			
	HD-W			11,9# (11,9#)	10,8# (10,8#)	9,9# (9,9#)	9,0 (9,2#)	7,1 (8,7#)	5,6 (7,1)			
10,5	EW		13,9# (13,9#)	12,3# (12,3#)	11,0# (11,0#)	10,1# (10,1#)	9,3# (9,3#)	8,7# (8,7#)	7,1 (8,2#)			
	HD-W		13,8# (13,8#)	12,2# (12,2#)	11,0# (11,0#)	10,0# (10,0#)	8,8 (9,3#)	7,0 (8,7#)	5,6 (7,1)			
9,0	EW		14,9# (14,9#)	12,9# (12,9#)	11,5# (11,5#)	10,4# (10,4#)	9,5# (9,5#)	8,6 (8,8#)	7,1 (8,1)	5,8 (6,7)		
	HD-W		14,8# (14,8#)	12,9# (12,9#)	11,4# (11,4#)	10,3# (10,3#)	8,6 (9,5#)	6,9 (8,6)	5,5 (7,1)	4,4 (5,8)		
7,5	EW	14,7# (14,7#)	16,4# (16,4#)	13,9# (13,9#)	12,1# (12,1#)	10,8# (10,8#)	9,8# (9,8#)	8,4 (9,0#)	6,9 (8,0)	5,7 (6,7)		
	HD-W	14,5# (14,5#)	16,3# (16,3#)	13,8# (13,8#)	12,1# (12,1#)	10,5 (10,8#)	8,3 (9,8#)	6,6 (8,4)	5,4 (6,9)	4,4 (5,7)		
6,0	EW	20,9# (20,9#)	18,5# (18,5#)	15,2# (15,2#)	12,9# (12,9#)	11,3# (11,3#)	9,9 (10,2#)	8,1 (9,2#)	6,7 (7,8)	5,6 (6,6)		
	HD-W	19,4# (19,4#)	18,3# (18,3#)	15,0# (15,0#)	12,8 (12,8#)	9,9 (11,3#)	7,9 (10,0)	6,4 (8,1)	5,2 (6,7)	4,3 (5,6)		
4,5	EW	28,8# (28,8#)	20,8# (20,8#)	16,5# (16,5#)	13,8# (13,8#)	11,6 (11,9#)	9,4 (10,5#)	7,8 (9,0)	6,5 (7,6)	5,5 (6,4)		
	HD-W	28,3# (28,3#)	20,6# (20,6#)	15,6 (16,4#)	11,8 (13,7#)	9,2 (11,8)	7,4 (9,5)	6,0 (7,8)	5,0 (6,5)	4,1 (5,5)		
3,0	EW	3,8# (3,8#)	23,0# (23,0#)	17,8# (17,8#)	13,7 (14,6#)	11,0 (12,5#)	9,0 (10,4)	7,5 (8,7)	6,3 (7,3)	5,3 (6,3)	4,6 (5,4)	
	HD-W	4,2# (4,2#)	19,3 (22,8#)	14,1 (17,7#)	10,8 (14,0)	8,6 (11,1)	7,0 (9,0)	5,7 (7,5)	4,8 (6,3)	4,0 (5,3)	3,4 (4,6)	
1,5	EW	2,6# (2,6#)	10,2# (10,2#)	16,6 (18,8#)	12,9 (15,1)	10,4 (12,1)	8,5 (10,0)	7,2 (8,4)	6,1 (7,1)	5,2 (6,1)	4,5 (5,4)	
	HD-W	2,6# (2,6#)	10,6# (10,6#)	12,8 (17,0)	9,9 (13,1)	8,0 (10,5)	6,5 (8,6)	5,4 (7,2)	4,6 (6,1)	3,9 (5,2)	3,3 (4,5)	
0	EW	3,4# (3,4#)	8,4# (8,4#)	15,6 (18,6)	12,2 (14,4)	9,9 (11,6)	8,2 (9,6)	6,9 (8,1)	5,9 (7,0)	5,1 (6,0)		
	HD-W	3,3# (3,3#)	8,5# (8,5#)	11,8 (16,0)	9,3 (12,4)	7,5 (9,9)	6,2 (8,2)	5,2 (6,9)	4,4 (5,9)	3,8 (5,1)		
-1,5	EW		8,7# (8,7#)	15,1 (16,9#)	11,7 (13,9)	9,5 (11,2)	7,9 (9,3)	6,7 (7,9)	5,8 (6,8)	5,0 (6,0)		
	HD-W		8,6# (8,6#)	11,2 (15,4)	8,8 (11,9)	7,1 (9,6)	5,9 (7,9)	5,0 (6,7)	4,3 (5,8)	3,7 (5,0)		
-3,0	EW			14,8 (16,4#)	11,5 (13,7)	9,3 (11,0)	7,8 (9,2)	6,6 (7,8)	5,7 (6,8)			
	HD-W		9,5# (9,5#)	11,0 (15,1)	8,5 (11,6)	6,9 (9,3)	5,7 (7,8)	4,9 (6,6)	4,2 (5,7)			
-4,5	EW					9,2 (10,9)	7,7 (9,1)					
	HD-W				8,4 (11,5)	6,8 (9,2)	5,7 (7,7)					
-6,0	EW											
	HD-W											
-7,5	EW											
	HD-W											
-9,0	EW											
	HD-W											

The lift capacities are stated in metric tonnes (t) on the lifting gear's stick tip, and can be lifted 360° on firm, level supporting surface. Values quoted in brackets are valid for the undercarriage when in longitudinal position. Capacities are valid for 600 mm wide triple grouser pads. Indicated loads are based on ISO 10567 standard and do not exceed 75 % of tipping or 87 % of hydraulic capacity (indicated via #). Lifting capacity of the excavator is limited by machine stability, hydraulic capacity and maximum permissible load of the load hook.
According to European Standard, EN 474-5: In the European Union excavators have to be equipped with an overload warning device, a load diagram and automatic check valves on the hoist cylinders, when they are used for lifting operations which require the use of lifting accessories.

Industrial Attachment

with Industrial-Type Straight Boom 11,50 m

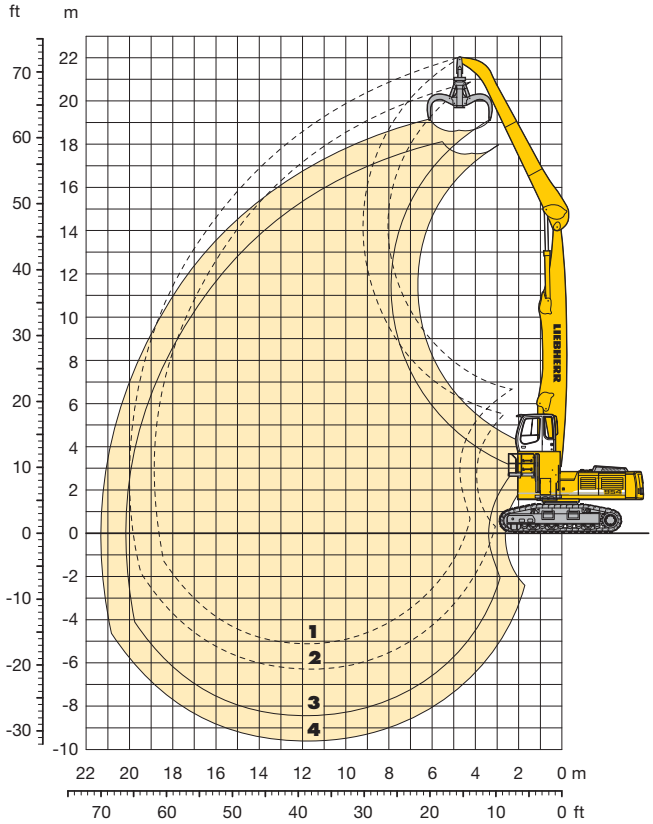

Attachment Envelope

Kinematic variant 2A

1 with industrial stick 7,80 m
2 with industrial stick 9,00 m
3 with industrial stick 7,80 m and grapple model 72 C
4 with industrial stick 9,00 m and grapple model 72 C

Operating Weight and Ground Pressure

Operating weight includes basic machine with rigid cab elevation and counterweight 14,5 t, industrial-type straight boom 11,50 m, industrial stick 7,80 m and grapple model 72 C with 5 semi-closed tines 1,20 m³.

Undercarriage		EW	
Pad width	mm	600	750
Weight	kg	69250	70250
Ground pressure	kg/cm²	1,17	0,95

Lift Capacities

with Industrial-Type Straight Boom 11,50 m

Industrial Stick 7,80 m (Variant 2A)

Height (m)	Under-carriage	Radius of load from centerline of machine (m)										
		4,5	6,0	7,5	9,0	10,5	12,0	13,5	15,0	16,5	18,0	19,5
21,0	EW											
19,5	EW	17,4# (17,4#)	15,7# (15,7#)	13,5# (13,5#)								
18,0	EW		16,4# (16,4#)	15,2# (15,2#)	13,6# (13,6#)	11,1# (11,1#)						
16,5	EW			15,9# (15,9#)	13,8# (13,8#)	12,0# (12,0#)	10,6# (10,6#)					
15,0	EW			16,1# (16,1#)	13,7# (13,7#)	11,9# (11,9#)	10,5# (10,5#)	8,6 (9,4#)				
13,5	EW			16,0# (16,0#)	13,7# (13,7#)	11,9# (11,9#)	10,5# (10,5#)	8,8 (9,3#)	7,0 (8,1)			
12,0	EW			16,1# (16,1#)	13,7# (13,7#)	11,9# (11,9#)	10,5# (10,5#)	8,8 (9,3#)	7,1 (8,2)			
10,5	EW		16,4# (16,4#)	16,4# (16,4#)	13,9# (13,9#)	12,0# (12,0#)	10,5# (10,5#)	8,6 (9,3#)	7,0 (8,1)	5,7 (6,6)		
9,0	EW		17,4# (17,4#)	16,7# (16,7#)	14,1# (14,1#)	12,1# (12,1#)	10,4 (10,5#)	8,4 (9,3#)	6,9 (8,0)	5,6 (6,6)		
7,5	EW	16,8# (16,8#)	20,8# (20,8#)	17,2# (17,2#)	14,3# (14,3#)	12,2# (12,2#)	10,0 (10,6#)	8,1 (9,3#)	6,7 (7,8)	5,5 (6,5)	4,6 (5,4)	
6,0	EW	30,2# (30,2#)	22,2# (22,2#)	17,6# (17,6#)	14,5# (14,5#)	11,8 (12,3#)	9,5 (10,6#)	7,8 (9,0)	6,4 (7,5)	5,4 (6,3)	4,5 (5,3)	
4,5	EW	4,3# (4,3#)	22,6# (22,6#)	17,7# (17,7#)	14,0 (14,5#)	11,1 (12,2#)	9,0 (10,4)	7,4 (8,6)	6,2 (7,2)	5,2 (6,1)	4,4 (5,2)	
3,0	EW		8,8# (8,8#)	16,6 (17,5#)	12,9 (14,3#)	10,3 (12,0#)	8,5 (9,9)	7,0 (8,3)	5,9 (7,0)	5,0 (6,0)	4,3 (5,1)	
1,5	EW		5,5# (5,5#)	15,3 (16,6#)	12,0 (13,7#)	9,7 (11,4)	8,0 (9,4)	6,7 (7,9)	5,7 (6,7)	4,9 (5,8)	4,2 (4,9#)	
0	EW		5,3# (5,3#)	12,5# (12,5#)	11,2 (12,8#)	9,1 (10,8#)	7,6 (9,0)	6,4 (7,6)	5,5 (6,5)	4,7 (5,6#)	4,1 (4,3#)	
-1,5	EW		6,1# (6,1#)	11,6# (11,6#)	10,8 (11,4#)	8,8 (9,8#)	7,3 (8,4#)	6,2 (7,2#)	5,3 (6,0#)	4,6 (4,8#)	3,4# (3,4#)	
-3,0	EW			10,6# (10,6#)	9,6# (9,6#)	8,5# (8,5#)	7,1 (7,3#)	6,1 (6,2#)	5,1# (5,1#)	3,9# (3,9#)		
-4,5	EW					6,7# (6,7#)	5,8# (5,8#)					
-6,0	EW											
-7,5	EW											
-9,0	EW											

Industrial Stick 9,00 m (Variant 2A)

Height (m)	Under-carriage	Radius of load from centerline of machine (m)										
		4,5	6,0	7,5	9,0	10,5	12,0	13,5	15,0	16,5	18,0	19,5
21,0	EW	15,7# (15,7#)	13,8# (13,8#)	11,7# (11,7#)								
19,5	EW		14,6# (14,6#)	13,4# (13,4#)	11,8# (11,8#)	9,6# (9,6#)						
18,0	EW			13,9# (13,9#)	12,9# (12,9#)	11,7# (11,7#)	9,8# (9,8#)					
16,5	EW			14,1# (14,1#)	13,3# (13,3#)	11,6# (11,6#)	10,3# (10,3#)	8,9 (9,1#)				
15,0	EW				13,2# (13,2#)	11,5# (11,5#)	10,2# (10,2#)	9,1# (9,1#)	7,3 (8,1#)			
13,5	EW				13,1# (13,1#)	11,5# (11,5#)	10,2# (10,2#)	9,1# (9,1#)	7,4 (8,1#)	5,9 (6,9)		
12,0	EW			14,0# (14,0#)	13,2# (13,2#)	11,5# (11,5#)	10,2# (10,2#)	9,0# (9,0#)	7,4 (8,1#)	6,0 (6,9)		
10,5	EW			14,2# (14,2#)	13,4# (13,4#)	11,6# (11,6#)	10,2# (10,2#)	9,0 (9,1#)	7,3 (8,1#)	6,0 (6,9)	4,8 (5,7)	
9,0	EW			14,8# (14,8#)	13,6# (13,6#)	11,7# (11,7#)	10,3# (10,3#)	8,8 (9,1#)	7,1 (8,1#)	5,8 (6,8)	4,8 (5,6)	
7,5	EW		14,1# (14,1#)	16,5# (16,5#)	13,8# (13,8#)	11,9# (11,9#)	10,3# (10,3#)	8,4 (9,1#)	6,9 (8,0)	5,7 (6,6)	4,7 (5,6)	
6,0	EW	13,9# (13,9#)	18,4# (18,4#)	17,0# (17,0#)	14,1# (14,1#)	12,0# (12,0#)	9,9 (10,4#)	8,0 (9,1#)	6,6 (7,7)	5,5 (6,4)	4,6 (5,4)	3,8 (4,6)
4,5	EW	30,2# (30,2#)	22,1# (22,1#)	17,4# (17,4#)	14,3# (14,3#)	11,6 (12,0#)	9,3 (10,3#)	7,6 (8,9)	6,3 (7,4)	5,3 (6,2)	4,4 (5,3)	3,7 (4,5)
3,0	EW	4,4# (4,4#)	22,3# (22,3#)	17,4# (17,4#)	13,6 (14,2#)	10,7 (11,9#)	8,7 (10,2)	7,2 (8,4)	6,0 (7,1)	5,1 (6,0)	4,3 (5,1)	3,6 (4,4)
1,5	EW	2,2# (2,2#)	9,2# (9,2#)	16,0 (17,0#)	12,4 (13,9#)	10,0 (11,7#)	8,2 (9,6)	6,8 (8,0)	5,7 (6,8)	4,9 (5,8)	4,1 (5,0)	3,6 (4,2#)
0	EW	2,5# (2,5#)	6,8# (6,8#)	14,7 (16,0#)	11,5 (13,2#)	9,3 (11,0)	7,7 (9,1)	6,4 (7,7)	5,5 (6,5)	4,7 (5,6)	4,0 (4,9)	3,5 (3,6#)
-1,5	EW	3,4# (3,4#)	6,6# (6,6#)	13,1# (13,1#)	10,8 (12,2#)	8,8 (10,3#)	7,3 (8,7)	6,1 (7,4)	5,2 (6,3)	4,5 (5,4#)	3,9 (4,2#)	
-3,0	EW		7,2# (7,2#)	12,3# (12,3#)	10,4 (10,8#)	8,4 (9,2#)	7,0 (7,9#)	5,9 (6,7#)	5,1 (5,7#)	4,4 (4,6#)	3,4# (3,4#)	
-4,5	EW			10,0# (10,0#)	8,9# (8,9#)	7,8# (7,8#)	6,7# (6,7#)	5,7# (5,7#)	4,7# (4,7#)			
-6,0	EW											
-7,5	EW											
-9,0	EW											

The lift capacities are stated in metric tonnes (t) on the lifting gear's stick tip, and can be lifted 360° on firm, level supporting surface. Values quoted in brackets are valid for the undercarriage when in longitudinal position. Capacities are valid for 600 mm wide triple grouser pads. Indicated loads are based on ISO 10567 standard and do not exceed 75 % of tipping or 87 % of hydraulic capacity (indicated via #). Lifting capacity of the excavator is limited by machine stability, hydraulic capacity and maximum permissible load of the load hook.
According to European Standard, EN 474-5: In the European Union excavators have to be equipped with an overload warning device, a load diagram and automatic check valves on the hoist cylinders, when they are used for lifting operations which require the use of lifting accessories.

Industrial Attachment

with Industrial-Type Straight Boom 11,50 m

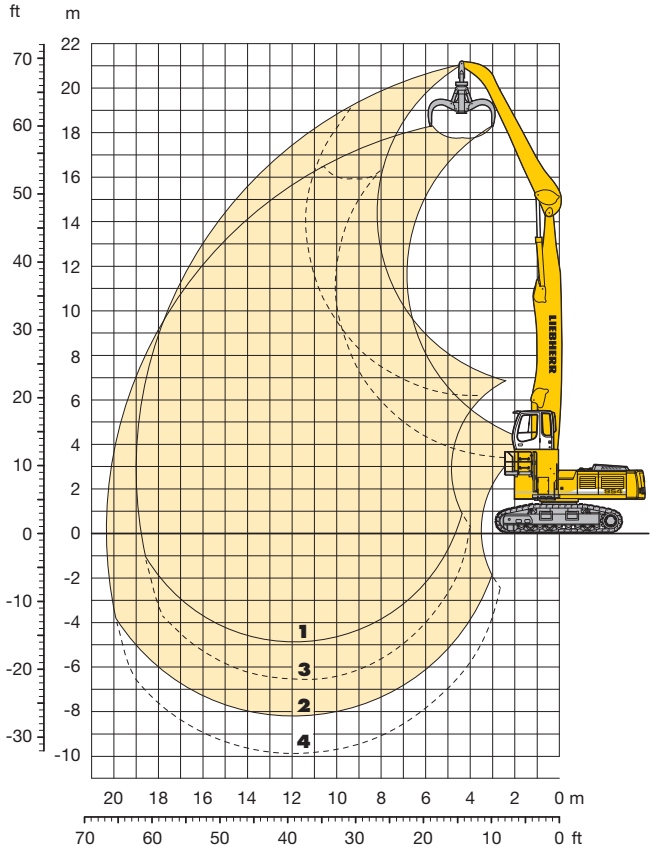

Attachment Envelope

Kinematic variants 3A/3B

1 with industrial stick 7,80 m (3B)
2 with industrial stick 7,80 m and grapple model 72 C (3B)
3 with industrial stick 7,80 m (3A)
4 with industrial stick 7,80 m and grapple model 72 C (3A)

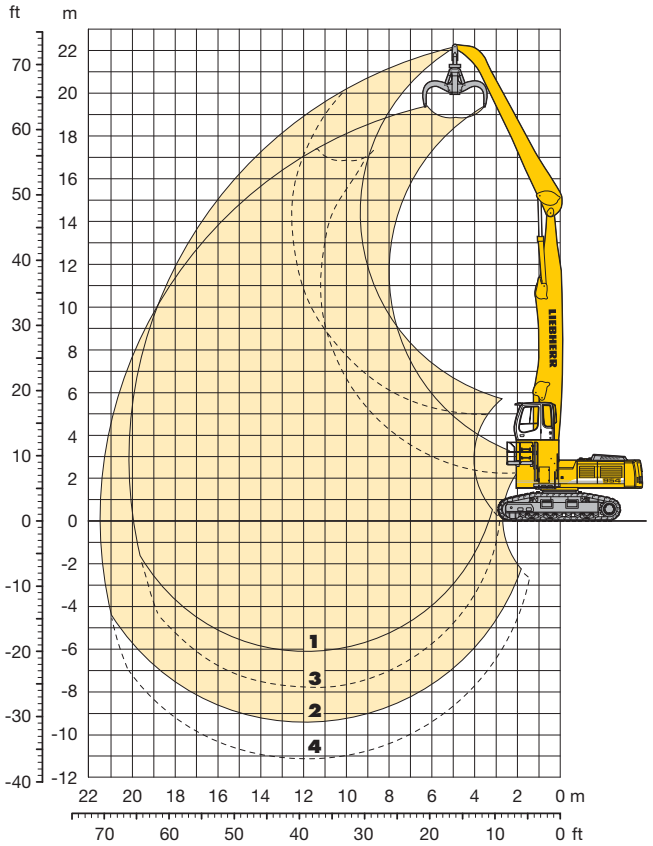

Attachment Envelope

Kinematic variants 3A/3B

1 with industrial stick 9,00 m (3B)
2 with industrial stick 9,00 m and grapple model 72 C (3B)
3 with industrial stick 9,00 m (3A)
4 with industrial stick 9,00 m and grapple model 72 C (3A)

Lift Capacities

with Industrial-Type Straight Boom 11,50 m

Industrial Stick 7,80 m (Variant 3A)

Height (m)	Under-carriage	Radius of load from centerline of machine (m)										
		4,5	6,0	7,5	9,0	10,5	12,0	13,5	15,0	16,5	18,0	19,5
21,0	EW											
19,5	EW											
18,0	EW					11,3# (11,3#)						
16,5	EW					10,9# (10,9#)	10,0# (10,0#)					
15,0	EW					10,7# (10,7#)	9,8# (9,8#)	8,7 (9,0#)				
13,5	EW					10,7# (10,7#)	9,7# (9,7#)	8,8 (8,9#)	7,0 (8,1)			
12,0	EW					10,8# (10,8#)	9,8# (9,8#)	8,7 (8,9#)	7,0 (8,1)	5,6 (6,6)		
10,5	EW					11,0# (11,0#)	9,9# (9,9#)	8,6 (9,0#)	7,0 (8,0)	5,7 (6,6)		
9,0	EW				12,8# (12,8#)	11,3# (11,3#)	10,1# (10,1#)	8,3 (9,1#)	6,8 (7,9)	5,6 (6,5)	4,6 (5,4)	
7,5	EW			15,8# (15,8#)	13,4# (13,4#)	11,6# (11,6#)	9,8 (10,3#)	8,0 (9,2#)	6,6 (7,7)	5,5 (6,4)	4,5 (5,4)	
6,0	EW	28,9# (28,9#)	21,2# (21,2#)	16,8# (16,8#)	14,0# (14,0#)	11,6 (12,0#)	9,3 (10,5#)	7,6 (8,9)	6,3 (7,4)	5,3 (6,2)	4,4 (5,3)	
4,5	EW		22,8# (22,8#)	17,7# (17,7#)	13,7 (14,5#)	10,8 (12,3#)	8,8 (10,3)	7,3 (8,5)	6,1 (7,1)	5,1 (6,0)	4,3 (5,2)	
3,0	EW		6,8# (6,8#)	16,1 (18,3#)	12,6 (14,8)	10,1 (11,8)	8,3 (9,7)	6,9 (8,1)	5,8 (6,9)	4,9 (5,9)	4,2 (5,0)	
1,5	EW		4,7# (4,7#)	14,2# (14,2#)	11,6 (13,8)	9,4 (11,2)	7,8 (9,2)	6,6 (7,8)	5,6 (6,6)	4,8 (5,7)	4,1 (4,9)	
0	EW	1,4# (1,4#)	4,9# (4,9#)	11,3# (11,3#)	11,0 (13,2)	8,9 (10,6)	7,4 (8,8)	6,3 (7,5)	5,4 (6,4)	4,6 (5,6)	4,0 (4,9)	
-1,5	EW		5,9# (5,9#)	10,8# (10,8#)	10,5 (12,7)	8,6 (10,3)	7,1 (8,6)	6,1 (7,3)	5,2 (6,3)	4,5 (5,5)	4,0 (4,8)	
-3,0	EW		7,1# (7,1#)	11,4# (11,4#)	10,3 (12,5)	8,4 (10,1)	7,0 (8,4)	5,9 (7,1)	5,1 (6,2)	4,5 (5,4)	4,0 (4,9)	
-4,5	EW			12,5# (12,5#)	10,3 (12,2#)	8,3 (10,0)	6,9 (8,3)	5,9 (7,1)	5,1 (6,2)	4,5 (5,4#)		
-6,0	EW					8,3 (9,2#)	6,9 (8,0#)	5,9 (6,8#)				
-7,5	EW											
-9,0	EW											

Industrial Stick 9,00 m (Variant 3A)

Height (m)	Under-carriage	Radius of load from centerline of machine (m)										
		4,5	6,0	7,5	9,0	10,5	12,0	13,5	15,0	16,5	18,0	19,5
21,0	EW											
19,5	EW					10,3# (10,3#)						
18,0	EW					10,5# (10,5#)	9,6# (9,6#)					
16,5	EW						9,3# (9,3#)	8,6# (8,6#)				
15,0	EW						9,2# (9,2#)	8,5# (8,5#)	7,3 (7,9#)			
13,5	EW						9,2# (9,2#)	8,4# (8,4#)	7,4 (7,8#)	5,9 (6,9)		
12,0	EW						9,2# (9,2#)	8,4# (8,4#)	7,4 (7,8#)	5,9 (6,9)		
10,5	EW					10,4# (10,4#)	9,3# (9,3#)	8,5# (8,5#)	7,2 (7,8#)	5,9 (6,9)	4,8 (5,6)	
9,0	EW					10,6# (10,6#)	9,5# (9,5#)	8,6# (8,6#)	7,0 (7,9#)	5,8 (6,7)	4,7 (5,6)	
7,5	EW				12,6# (12,6#)	11,0# (11,0#)	9,8# (9,8#)	8,3 (8,8#)	6,8 (7,9)	5,6 (6,6)	4,6 (5,5)	3,8 (4,6)
6,0	EW		19,4# (19,4#)	15,7# (15,7#)	13,2# (13,2#)	11,4# (11,4#)	9,7 (10,0#)	7,9 (9,0#)	6,5 (7,6)	5,4 (6,4)	4,5 (5,4)	3,8 (4,5)
4,5	EW	29,3# (29,3#)	21,2# (21,2#)	16,7# (16,7#)	13,8# (13,8#)	11,3 (11,8#)	9,1 (10,3#)	7,5 (8,7)	6,2 (7,3)	5,2 (6,1)	4,4 (5,2)	3,7 (4,4)
3,0	EW	2,9# (2,9#)	18,2# (18,2#)	17,2 (17,6#)	13,2 (14,3#)	10,5 (12,1#)	8,5 (10,0)	7,0 (8,3)	5,9 (7,0)	5,0 (5,9)	4,2 (5,0)	3,6 (4,3)
1,5	EW	1,8# (1,8#)	7,6# (7,6#)	15,5 (18,0#)	12,1 (14,3)	9,7 (11,5)	8,0 (9,4)	6,6 (7,9)	5,6 (6,7)	4,7 (5,7)	4,1 (4,9)	3,5 (4,2)
0	EW	2,3# (2,3#)	6,1# (6,1#)	14,3 (14,4#)	11,2 (13,4)	9,0 (10,8)	7,5 (8,9)	6,3 (7,5)	5,3 (6,4)	4,6 (5,5)	3,9 (4,8)	3,4 (4,2)
-1,5	EW	3,3# (3,3#)	6,3# (6,3#)	12,0# (12,0#)	10,5 (12,7)	8,5 (10,3)	7,1 (8,5)	6,0 (7,2)	5,1 (6,2)	4,4 (5,3)	3,8 (4,7)	3,4 (4,1)
-3,0	EW	4,5# (4,5#)	7,0# (7,0#)	11,6# (11,6#)	10,1 (12,3)	8,2 (9,9)	6,8 (8,3)	5,8 (7,0)	5,0 (6,0)	4,3 (5,2)	3,8 (4,6)	
-4,5	EW		8,0# (8,0#)	12,1# (12,1#)	9,9 (12,1)	8,0 (9,7)	6,7 (8,1)	5,7 (6,9)	4,9 (5,9)	4,3 (5,2)	3,8 (4,6)	
-6,0	EW			13,0# (13,0#)	9,9 (11,5#)	8,0 (9,7)	6,6 (8,0)	5,6 (6,8)	4,9 (5,9)	4,3 (5,1#)		
-7,5	EW											
-9,0	EW											

The lift capacities are stated in metric tonnes (t) on the lifting gear's stick tip, and can be lifted 360° on firm, level supporting surface. Values quoted in brackets are valid for the undercarriage when in longitudinal position. Capacities are valid for 600 mm wide triple grouser pads. Indicated loads are based on ISO 10567 standard and do not exceed 75 % of tipping or 87 % of hydraulic capacity (indicated via #). Lifting capacity of the excavator is limited by machine stability, hydraulic capacity and maximum permissible load of the load hook.
According to European Standard, EN 474-5: In the European Union excavators have to be equipped with an overload warning device, a load diagram and automatic check valves on the hoist cylinders, when they are used for lifting operations which require the use of lifting accessories.

Lift Capacities

with Industrial-Type Straight Boom 11,50 m

Industrial Stick 7,80 m (Variant 3B)

Height (m)	Under-carriage	Radius of load from centerline of machine (m)										
		4,5	6,0	7,5	9,0	10,5	12,0	13,5	15,0	16,5	18,0	19,5
21,0	EW	16,7# (16,7#)										
19,5	EW	17,7# (17,7#)	15,9# (15,9#)	13,4# (13,4#)								
18,0	EW		14,9# (14,9#)	12,7# (12,7#)	11,2# (11,2#)	10,1# (10,1#)						
16,5	EW		14,3# (14,3#)	12,2# (12,2#)	10,8# (10,8#)	9,7# (9,7#)	9,0# (9,0#)					
15,0	EW		14,0# (14,0#)	11,9# (11,9#)	10,6# (10,6#)	9,6# (9,6#)	8,8# (8,8#)	8,2# (8,2#)				
13,5	EW		13,9# (13,9#)	11,9# (11,9#)	10,6# (10,6#)	9,5# (9,5#)	8,7# (8,7#)	8,1# (8,1#)	7,0 (7,6#)			
12,0	EW		14,1# (14,1#)	12,1# (12,1#)	10,7# (10,7#)	9,6# (9,6#)	8,8# (8,8#)	8,1# (8,1#)	7,0 (7,6#)	5,6 (6,6)		
10,5	EW		14,8# (14,8#)	12,6# (12,6#)	11,0# (11,0#)	9,8# (9,8#)	8,9# (8,9#)	8,2# (8,2#)	7,0 (7,6#)	5,7 (6,6)		
9,0	EW	14,6# (14,6#)	15,8# (15,8#)	13,3# (13,3#)	11,5# (11,5#)	10,1# (10,1#)	9,1# (9,1#)	8,3# (8,3#)	6,8 (7,6#)	5,6 (6,5)	4,6 (5,4)	
7,5	EW	17,1# (17,1#)	17,3# (17,3#)	14,2# (14,2#)	12,1# (12,1#)	10,5# (10,5#)	9,4# (9,4#)	8,0 (8,5#)	6,6 (7,7)	5,5 (6,4)	4,5 (5,4)	
6,0	EW	26,1# (26,1#)	19,2# (19,2#)	15,2# (15,2#)	12,7# (12,7#)	11,0# (11,0#)	9,3 (9,7#)	7,7 (8,7#)	6,3 (7,4)	5,3 (6,2)	4,4 (5,3)	
4,5	EW		21,1# (21,1#)	16,4# (16,4#)	13,4# (13,4#)	10,8 (11,4#)	8,8 (10,0#)	7,3 (8,5)	6,1 (7,1)	5,1 (6,1)	4,3 (5,2)	
3,0	EW		6,8# (6,8#)	16,2 (17,3#)	12,6 (14,0#)	10,1 (11,9#)	8,3 (9,7)	6,9 (8,1)	5,8 (6,9)	4,9 (5,9)	4,2 (5,0)	
1,5	EW		4,7# (4,7#)	14,2# (14,2#)	11,7 (13,9)	9,4 (11,2)	7,8 (9,3)	6,6 (7,8)	5,6 (6,6)	4,8 (5,7)	4,1 (4,9)	
0	EW		4,9# (4,9#)	11,3# (11,3#)	11,0 (13,2)	8,9 (10,7)	7,4 (8,9)	6,3 (7,5)	5,4 (6,4)	4,6 (5,6)	4,0 (4,9)	
-1,5	EW		5,9# (5,9#)	10,8# (10,8#)	10,6 (12,7)	8,6 (10,3)	7,2 (8,6)	6,1 (7,3)	5,2 (6,3)	4,5 (5,5)	4,0 (4,8)	
-3,0	EW			11,4# (11,4#)	10,3 (12,5)	8,4 (10,1)	7,0 (8,4)	5,9 (7,1)	5,1 (6,2)	4,5 (5,4)		
-4,5	EW						6,9 (8,3)					
-6,0	EW											
-7,5	EW											
-9,0	EW											

Industrial Stick 9,00 m (Variant 3B)

Height (m)	Under-carriage	Radius of load from centerline of machine (m)										
		4,5	6,0	7,5	9,0	10,5	12,0	13,5	15,0	16,5	18,0	19,5
21,0	EW	15,9# (15,9#)	14,2# (14,2#)	12,3# (12,3#)								
19,5	EW		14,5# (14,5#)	12,2# (12,2#)	10,8# (10,8#)	9,8# (9,8#)						
18,0	EW			11,6# (11,6#)	10,3# (10,3#)	9,3# (9,3#)	8,6# (8,6#)					
16,5	EW			11,2# (11,2#)	9,9# (9,9#)	9,0# (9,0#)	8,3# (8,3#)	7,8# (7,8#)				
15,0	EW			11,0# (11,0#)	9,8# (9,8#)	8,9# (8,9#)	8,2# (8,2#)	7,6# (7,6#)	7,2# (7,2#)			
13,5	EW			11,0# (11,0#)	9,8# (9,8#)	8,9# (8,9#)	8,1# (8,1#)	7,5# (7,5#)	7,1# (7,1#)	5,9 (6,7#)		
12,0	EW			11,1# (11,1#)	9,9# (9,9#)	9,0# (9,0#)	8,2# (8,2#)	7,6# (7,6#)	7,1# (7,1#)	6,0 (6,6#)		
10,5	EW			11,5# (11,5#)	10,2# (10,2#)	9,2# (9,2#)	8,3# (8,3#)	7,7# (7,7#)	7,1# (7,1#)	5,9 (6,6#)	4,8 (5,6)	
9,0	EW		13,0# (13,0#)	12,1# (12,1#)	10,6# (10,6#)	9,5# (9,5#)	8,5# (8,5#)	7,8# (7,8#)	7,1 (7,2#)	5,8 (6,7#)	4,7 (5,6)	
7,5	EW	10,9# (10,9#)	14,2# (14,2#)	13,0# (13,0#)	11,2# (11,2#)	9,9# (9,9#)	8,8# (8,8#)	8,0# (8,0#)	6,8 (7,3#)	5,6 (6,6)	4,7 (5,5)	3,8 (4,6)
6,0	EW	14,6# (14,6#)	17,3# (17,3#)	14,1# (14,1#)	11,9# (11,9#)	10,3# (10,3#)	9,1# (9,1#)	7,9 (8,2#)	6,5 (7,5#)	5,4 (6,4)	4,5 (5,4)	3,8 (4,5)
4,5	EW	26,6# (26,6#)	19,2# (19,2#)	15,2# (15,2#)	12,6# (12,6#)	10,8# (10,8#)	9,1 (9,5#)	7,5 (8,4#)	6,2 (7,3)	5,2 (6,1)	4,4 (5,2)	3,7 (4,4)
3,0	EW	2,9# (2,9#)	18,2# (18,2#)	16,2# (16,2#)	13,2 (13,3#)	10,5 (11,3#)	8,5 (9,8#)	7,1 (8,3)	5,9 (7,0)	5,0 (5,9)	4,2 (5,0)	3,6 (4,3)
1,5	EW	1,8# (1,8#)	7,6# (7,6#)	15,6 (17,0#)	12,1 (13,8#)	9,7 (11,5)	8,0 (9,4)	6,7 (7,9)	5,6 (6,7)	4,8 (5,7)	4,1 (4,9)	3,5 (4,2)
0	EW	2,3# (2,3#)	6,1# (6,1#)	14,3 (14,4#)	11,2 (13,4)	9,1 (10,8)	7,5 (8,9)	6,3 (7,5)	5,3 (6,4)	4,6 (5,5)	3,9 (4,8)	3,4 (4,2)
-1,5	EW	3,3# (3,3#)	6,3# (6,3#)	12,0# (12,0#)	10,5 (12,7)	8,6 (10,3)	7,1 (8,5)	6,0 (7,2)	5,1 (6,2)	4,4 (5,3)	3,8 (4,7)	3,4 (4,1)
-3,0	EW		7,0# (7,0#)	11,6# (11,6#)	10,2 (12,3)	8,2 (9,9)	6,8 (8,3)	5,8 (7,0)	5,0 (6,0)	4,3 (5,2)	3,8 (4,6)	
-4,5	EW			12,1# (12,1#)	10,0 (12,1)	8,0 (9,8)	6,7 (8,1)	5,7 (6,9)	4,9 (5,9)			
-6,0	EW											
-7,5	EW											
-9,0	EW											

The lift capacities are stated in metric tonnes (t) on the lifting gear's stick tip, and can be lifted 360° on firm, level supporting surface. Values quoted in brackets are valid for the undercarriage when in longitudinal position. Capacities are valid for 600 mm wide triple grouser pads. Indicated loads are based on ISO 10567 standard and do not exceed 75 % of tipping or 87 % of hydraulic capacity (indicated via #). Lifting capacity of the excavator is limited by machine stability, hydraulic capacity and maximum permissible load of the load hook.
According to European Standard, EN 474-5: In the European Union excavators have to be equipped with an overload warning device, a load diagram and automatic check valves on the hoist cylinders, when they are used for lifting operations which require the use of lifting accessories.

Industrial Attachment

with Industrial-Type Gooseneck Boom 10,50 m

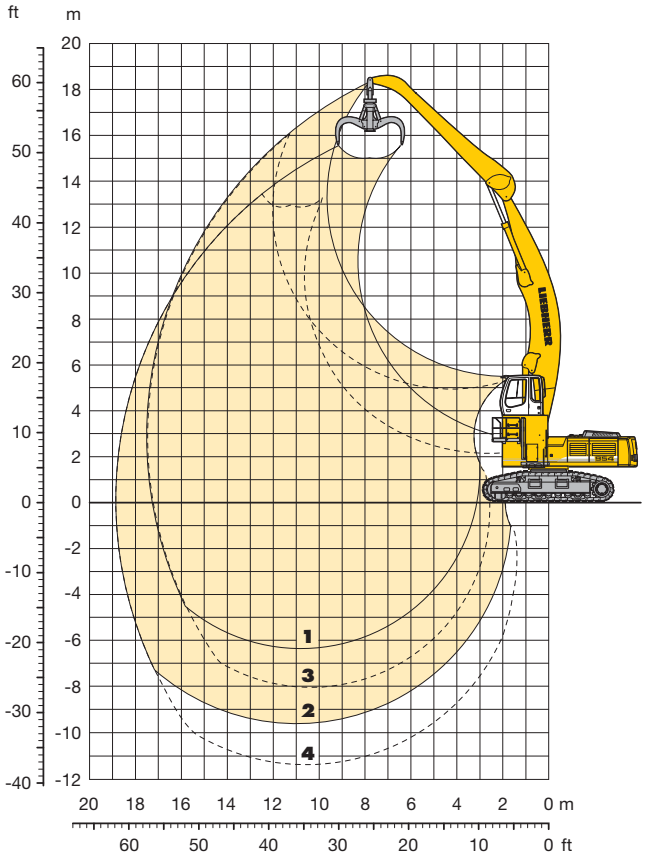

Attachment Envelope

Kinematic variants 3C/3D

1 with industrial stick 7,80 m (3D)
2 with industrial stick 7,80 m and grapple model 72 C (3D)
3 with industrial stick 7,80 m (3C)
4 with industrial stick 7,80 m and grapple model 72 C (3C)

Operating Weight and Ground Pressure

Operating weight includes basic machine with rigid cab elevation and counterweight 14,5 t, industrial-type gooseneck boom 10,50 m, industrial stick 7,80 m and grapple model 72 C with 5 semi-closed tines 1,20 m³.

Undercarriage		HD-W		EW	
Pad width	mm	600	750	600	750
Weight	kg	62500	63750	68750	69750
Ground pressure	kg/cm²	1,05	0,86	1,16	0,94

Lift Capacities

with Industrial-Type Gooseneck Boom 10,50 m

Industrial Stick 7,80 m (Variant 3C)

Height (m)	Under-carriage	Radius of load from centerline of machine (m) 4,5	6,0	7,5	9,0	10,5	12,0	13,5	15,0	16,5	18,0	19,5
21,0	EW											
	HD-W											
19,5	EW											
	HD-W											
18,0	EW											
	HD-W											
16,5	EW					7,9# (7,9#)						
	HD-W											
15,0	EW					7,4# (7,4#)	7,3# (7,3#)					
	HD-W					7,4# (7,4#)	7,3# (7,3#)					
13,5	EW					7,2# (7,2#)	7,1# (7,1#)	7,0# (7,0#)				
	HD-W					7,2# (7,2#)	7,1# (7,1#)	7,0# (7,0#)				
12,0	EW					7,2# (7,2#)	7,0# (7,0#)	6,9# (6,9#)				
	HD-W					7,2# (7,2#)	7,0# (7,0#)	6,9# (6,9#)				
10,5	EW					7,4# (7,4#)	7,1# (7,1#)	6,9# (6,9#)	6,8# (6,8#)			
	HD-W					7,4# (7,4#)	7,1# (7,1#)	6,9# (6,9#)	5,8 (6,8#)			
9,0	EW					7,8# (7,8#)	7,4# (7,4#)	7,1# (7,1#)	6,8# (6,8#)			
	HD-W					7,8# (7,8#)	7,4# (7,4#)	7,0# (7,0#)	5,7 (6,8#)			
7,5	EW				9,1# (9,1#)	8,3# (8,3#)	7,8# (7,8#)	7,3# (7,3#)	7,0# (7,0#)	5,8 (6,8#)		
	HD-W				9,0# (9,0#)	8,3# (8,3#)	7,7# (7,7#)	6,9 (7,3#)	5,5 (7,0#)	4,5 (5,8)		
6,0	EW		13,7# (13,7#)	11,5# (11,5#)	10,0# (10,0#)	9,0# (9,0#)	8,2# (8,2#)	7,7# (7,7#)	6,9 (7,2#)	5,7 (6,7)		
	HD-W			11,3# (11,3#)	9,9# (9,9#)	8,9# (8,9#)	8,1 (8,2#)	6,6 (7,6#)	5,3 (6,9)	4,4 (5,7)		
4,5	EW	22,8# (22,8#)	16,5# (16,5#)	13,2# (13,2#)	11,1# (11,1#)	9,8# (9,8#)	8,8# (8,8#)	7,9 (8,0#)	6,6 (7,5#)	5,6 (6,5)		
	HD-W	22,2# (22,2#)	16,2# (16,2#)	13,0# (13,0#)	11,0# (11,0#)	9,5 (9,7#)	7,6 (8,7#)	6,2 (8,0)	5,1 (6,6)	4,2 (5,5)		
3,0	EW	8,3# (8,3#)	19,4# (19,4#)	14,9# (14,9#)	12,3# (12,3#)	10,5# (10,5#)	9,1 (9,3#)	7,6 (8,4#)	6,4 (7,4)	5,4 (6,3)		
	HD-W	9,1# (9,1#)	19,1# (19,1#)	14,5 (14,7#)	11,1 (12,1#)	8,8 (10,5#)	7,1 (9,2)	5,9 (7,6)	4,9 (6,4)	4,0 (5,4)		
1,5	EW	5,6# (5,6#)	14,3# (14,3#)	16,4# (16,4#)	13,1 (13,3#)	10,5 (11,3#)	8,7 (9,9#)	7,3 (8,5)	6,1 (7,2)	5,2 (6,2)		
	HD-W	5,6# (5,6#)	15,0# (15,0#)	13,0 (16,3#)	10,2 (13,2#)	8,2 (10,7)	6,7 (8,7)	5,5 (7,3)	4,6 (6,1)	3,9 (5,2)		
0	EW	5,8# (5,8#)	11,2# (11,2#)	15,8 (17,6#)	12,3 (14,2#)	10,0 (11,7)	8,3 (9,7)	7,0 (8,2)	5,9 (7,0)	5,1 (6,0)		
	HD-W	5,7# (5,7#)	11,4# (11,4#)	12,0 (16,1)	9,4 (12,5)	7,6 (10,1)	6,3 (8,3)	5,2 (7,0)	4,4 (5,9)	3,8 (5,1)		
-1,5	EW	6,7# (6,7#)	10,8# (10,8#)	15,1 (18,1)	11,8 (14,0)	9,5 (11,3)	7,9 (9,4)	6,7 (7,9)	5,8 (6,8)	5,0 (5,9)		
	HD-W	6,6# (6,6#)	10,8# (10,8#)	11,3 (15,4)	8,8 (11,9)	7,2 (9,6)	5,9 (8,0)	5,0 (6,7)	4,3 (5,7)	3,7 (5,0)		
-3,0	EW	7,8# (7,8#)	11,2# (11,2#)	14,7 (17,7)	11,4 (13,6)	9,3 (11,0)	7,7 (9,1)	6,6 (7,8)	5,7 (6,7)			
	HD-W	7,7# (7,7#)	11,1# (11,1#)	10,9 (15,0)	8,5 (11,5)	6,9 (9,3)	5,7 (7,7)	4,8 (6,5)	4,1 (5,6)			
-4,5	EW	8,9# (8,9#)	11,9# (11,9#)	14,6 (17,6)	11,3 (13,4)	9,1 (10,8)	7,6 (9,0)	6,5 (7,7)	5,6 (6,7)			
	HD-W	8,8# (8,8#)	11,8# (11,8#)	10,7 (14,8)	8,3 (11,4)	6,7 (9,1)	5,6 (7,6)	4,8 (6,5)	4,1 (5,6)			
-6,0	EW		12,9# (12,9#)	14,7 (17,6)	11,3 (13,5)	9,1 (10,8)	7,6 (9,0)	6,5 (7,7)				
	HD-W		12,8# (12,8#)	10,8 (14,9)	8,3 (11,3)	6,7 (9,1)	5,6 (7,6)	4,8 (6,5)	4,2 (5,7)			
-7,5	EW				11,4 (13,6)	9,2 (10,9)	7,7 (9,1)					
	HD-W				8,4 (11,5)	6,8 (9,2)	5,7 (7,7)					
-9,0	EW											
	HD-W											

Industrial Stick 7,80 m (Variant 3D)

Height (m)	Under-carriage	Radius of load from centerline of machine (m) 4,5	6,0	7,5	9,0	10,5	12,0	13,5	15,0	16,5	18,0	19,5
21,0	EW											
	HD-W											
19,5	EW											
	HD-W											
18,0	EW			11,4# (11,4#)								
	HD-W			11,3# (11,3#)								
16,5	EW			10,5# (10,5#)	9,7# (9,7#)	9,2# (9,2#)						
	HD-W			10,6# (10,6#)	9,8# (9,8#)							
15,0	EW				9,3# (9,3#)	8,7# (8,7#)	8,4# (8,4#)					
	HD-W			10,0# (10,0#)	9,3# (9,3#)	8,8# (8,8#)	8,4# (8,4#)					
13,5	EW				9,1# (9,1#)	8,6# (8,6#)	8,2# (8,2#)	7,9# (7,9#)				
	HD-W				9,1# (9,1#)	8,6# (8,6#)	8,2# (8,2#)	7,2 (7,9#)				
12,0	EW				9,2# (9,2#)	8,6# (8,6#)	8,1# (8,1#)	7,8# (7,8#)				
	HD-W				9,1# (9,1#)	8,6# (8,6#)	8,1# (8,1#)	7,3 (7,8#)				
10,5	EW			10,3# (10,3#)	9,4# (9,4#)	8,8# (8,8#)	8,2# (8,2#)	7,8# (7,8#)	7,3 (7,5#)			
	HD-W			10,2# (10,2#)	9,4# (9,4#)	8,7# (8,7#)	8,2# (8,2#)	7,2 (7,8#)	5,8 (7,3)			
9,0	EW			11,0# (11,0#)	9,9# (9,9#)	9,1# (9,1#)	8,5# (8,5#)	7,9# (7,9#)	7,2 (7,5#)			
	HD-W			10,9# (10,9#)	9,9# (9,9#)	9,1# (9,1#)	8,4# (8,4#)	7,1 (7,9#)	5,7 (7,2)			
7,5	EW		13,9# (13,9#)	12,0# (12,0#)	10,6# (10,6#)	9,6# (9,6#)	8,8# (8,8#)	8,2# (8,2#)	7,1 (7,7#)	5,8 (6,8)		
	HD-W		13,7# (13,7#)	11,9# (11,9#)	10,5# (10,5#)	9,5# (9,5#)	8,5 (8,7#)	6,8 (8,1#)	5,5 (7,1)	4,5 (5,8)		
6,0	EW	20,7# (20,7#)	16,1# (16,1#)	13,4# (13,4#)	11,5# (11,5#)	10,2# (10,2#)	9,2# (9,2#)	8,3 (8,4#)	6,9 (7,8#)	5,7 (6,6)		
	HD-W	20,3# (20,3#)	15,9# (15,9#)	13,2# (13,2#)	11,4# (11,4#)	10,1# (10,1#)	8,1 (9,1#)	6,5 (8,3)	5,3 (6,9)	4,4 (5,7)		
4,5	EW	25,8# (25,8#)	18,7# (18,7#)	14,9# (14,9#)	12,5# (12,5#)	10,8# (10,8#)	9,6 (9,6#)	7,9 (8,8#)	6,6 (7,7)	5,6 (6,5)		
	HD-W	25,3# (25,3#)	18,4# (18,4#)	14,7# (14,7#)	12,2 (12,4#)	9,5 (10,8#)	7,6 (9,6#)	6,2 (8,0)	5,1 (6,6)	4,2 (5,5)		
3,0	EW	8,3# (8,3#)	21,2# (21,2#)	16,4# (16,4#)	13,4# (13,4#)	11,2 (11,5#)	9,1 (10,1#)	7,6 (8,8)	6,4 (7,4)	5,4 (6,3)		
	HD-W	9,1# (9,1#)	19,8 (20,9#)	14,5 (16,2#)	11,1 (13,3#)	8,8 (11,3)	7,1 (9,2)	5,9 (7,6)	4,9 (6,4)	4,0 (5,4)		
1,5	EW	5,6# (5,6#)	14,3# (14,3#)	16,8 (17,6#)	13,1 (14,3#)	10,5 (12,1#)	8,7 (10,1)	7,2 (8,5)	6,1 (7,2)	5,2 (6,2)		
	HD-W	5,6# (5,6#)	15,0# (15,0#)	13,0 (17,3)	10,2 (13,3)	8,2 (10,6)	6,7 (8,7)	5,5 (7,3)	4,6 (6,1)	3,9 (5,2)		
0	EW	5,8# (5,8#)	11,2# (11,2#)	15,8 (18,5#)	12,3 (14,5)	10,0 (11,7)	8,3 (9,7)	7,0 (8,2)	5,9 (7,0)	5,1 (6,0)		
	HD-W	5,7# (5,7#)	11,4# (11,4#)	11,9 (16,1)	9,4 (12,5)	7,6 (10,1)	6,3 (8,3)	5,2 (7,0)	4,4 (5,9)	3,8 (5,1)		
-1,5	EW	6,7# (6,7#)	10,8# (10,8#)	15,1 (18,1)	11,8 (14,0)	9,5 (11,3)	7,9 (9,4)	6,7 (7,9)	5,8 (6,8)	5,0 (5,9)		
	HD-W	6,6# (6,6#)	10,8# (10,8#)	11,3 (15,4)	8,8 (11,9)	7,2 (9,6)	5,9 (8,0)	5,0 (6,7)	4,3 (5,7)	3,7 (5,0)		
-3,0	EW		11,2# (11,2#)	14,7 (17,7)	11,4 (13,6)	9,3 (11,0)	7,7 (9,1)	6,6 (7,8)	5,7 (6,7)			
	HD-W		11,1# (11,1#)	10,9 (15,0)	8,5 (11,5)	6,9 (9,3)	5,7 (7,7)	4,8 (6,5)	4,1 (5,6)			
-4,5	EW			14,6 (17,6)	11,3 (13,5)	9,1 (10,8)	7,6 (9,0)	6,5 (7,7)	5,6 (6,7)			
	HD-W		11,8# (11,8#)	10,7 (14,8)	8,3 (11,4)	6,7 (9,1)	5,6 (7,6)	4,8 (6,5)	4,1 (5,6)			
-6,0	EW					9,1 (10,8)						
	HD-W					6,7 (9,1)	5,6 (7,6)					
-7,5	EW											
	HD-W											
-9,0	EW											
	HD-W											

The lift capacities are stated in metric tonnes (t) on the lifting gear's stick tip, and can be lifted 360° on firm, level supporting surface. Values quoted in brackets are valid for the undercarriage when in longitudinal position. Capacities are valid for 600 mm wide triple grouser pads. Indicated loads are based on ISO 10567 standard and do not exceed 75 % of tipping or 87 % of hydraulic capacity (indicated via #). Lifting capacity of the excavator is limited by machine stability, hydraulic capacity and maximum permissible load of the load hook.
According to European Standard, EN 474-5: In the European Union excavators have to be equipped with an overload warning device, a load diagram and automatic check valves on the hoist cylinders, when they are used for lifting operations which require the use of lifting accessories.

Industrial Attachment

with Industrial-Type Gooseneck Boom 11,50 m

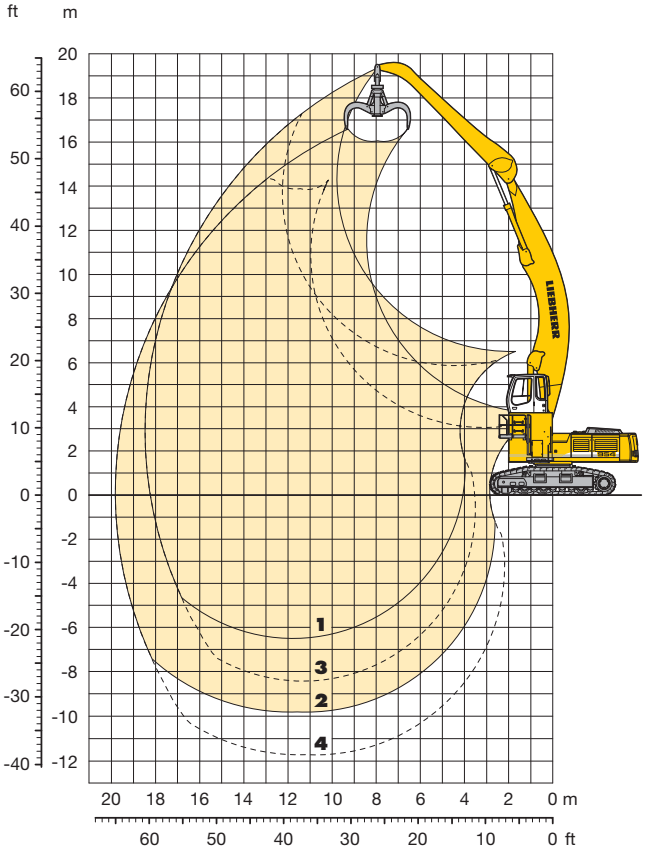

Attachment Envelope

Kinematic variants 3C/3D

1 with industrial stick 7,80 m (3D)
2 with industrial stick 7,80 m and grapple model 72 C (3D)
3 with industrial stick 7,80 m (3C)
4 with industrial stick 7,80 m and grapple model 72 C (3C)

Operating Weight and Ground Pressure

Operating weight includes basic machine with rigid cab elevation and counterweight 14,5 t, industrial-type gooseneck boom 11,50 m, industrial stick 7,80 m and grapple model 72 C with 5 semi-closed tines 1,20 m³.

Undercarriage		EW	
Pad width	mm	600	750
Weight	kg	69400	70400
Ground pressure	kg/cm²	1,17	0,95

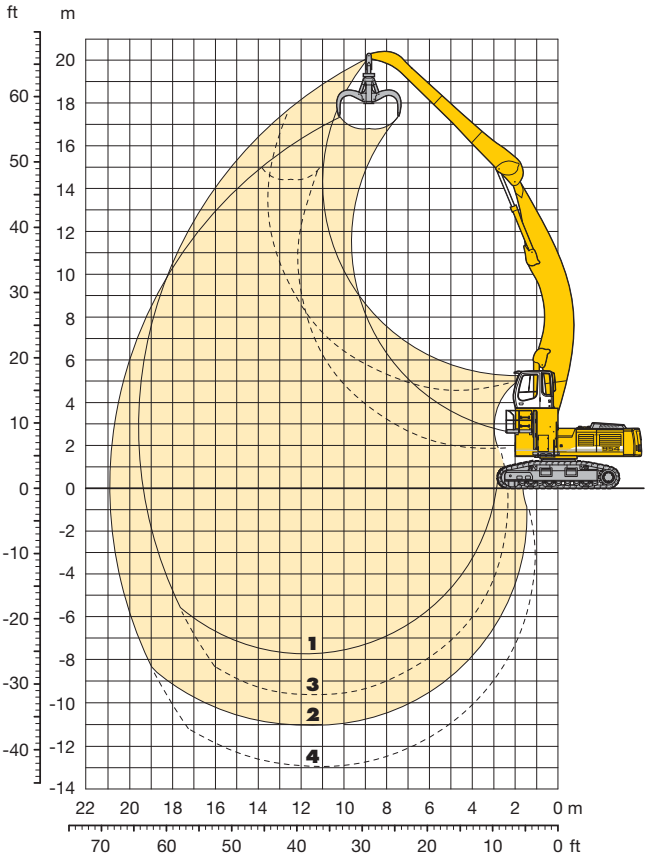

Attachment Envelope

Kinematic variants 3C/3D

1 with industrial stick 9,00 m (3D)
2 with industrial stick 9,00 m and grapple model 72 C (3D)
3 with industrial stick 9,00 m (3C)
4 with industrial stick 9,00 m and grapple model 72 C (3C)

Lift Capacities

with Industrial-Type Gooseneck Boom 11,50 m

Industrial Stick 7,80 m (Variant 3C)

Height (m)	Under-carriage	Radius of load from centerline of machine (m)										
		4,5	6,0	7,5	9,0	10,5	12,0	13,5	15,0	16,5	18,0	19,5
21,0	EW											
19,5	EW											
18,0	EW											
16,5	EW					7,2# (7,2#)	7,0# (7,0#)					
15,0	EW						6,7# (6,7#)	6,5# (6,5#)				
13,5	EW						6,6# (6,6#)	6,4# (6,4#)				
12,0	EW					7,1# (7,1#)	6,7# (6,7#)	6,4# (6,4#)	6,2# (6,2#)			
10,5	EW					7,4# (7,4#)	6,9# (6,9#)	6,5# (6,5#)	6,2# (6,2#)	5,9 (6,0#)		
9,0	EW				8,5# (8,5#)	7,8# (7,8#)	7,2# (7,2#)	6,7# (6,7#)	6,4# (6,4#)	5,8 (6,1#)		
7,5	EW			10,6# (10,6#)	9,3# (9,3#)	8,3# (8,3#)	7,5# (7,5#)	7,0# (7,0#)	6,5# (6,5#)	5,7 (6,2#)		
6,0	EW	20,2# (20,2#)	14,9# (14,9#)	12,0# (12,0#)	10,2# (10,2#)	8,9# (8,9#)	8,0# (8,0#)	7,3# (7,3#)	6,6 (6,8#)	5,5 (6,4#)	4,6 (5,4)	
4,5	EW	6,9# (6,9#)	17,5# (17,5#)	13,5# (13,5#)	11,1# (11,1#)	9,6# (9,6#)	8,5# (8,5#)	7,6 (7,6#)	6,3 (7,0#)	5,3 (6,2)	4,5 (5,3)	
3,0	EW	2,4# (2,4#)	11,2# (11,2#)	15,0# (15,0#)	12,1# (12,1#)	10,2# (10,2#)	8,6 (8,9#)	7,2 (8,0#)	6,0 (7,1)	5,1 (6,0)	4,3 (5,2)	
1,5	EW	2,5# (2,5#)	7,8# (7,8#)	15,3 (16,2#)	12,1 (13,0#)	9,8 (10,9#)	8,1 (9,4#)	6,8 (8,0)	5,8 (6,8)	4,9 (5,8)	4,2 (5,0)	
0	EW	3,7# (3,7#)	7,3# (7,3#)	14,0# (14,0#)	11,3 (13,5)	9,2 (10,9)	7,7 (9,1)	6,5 (7,7)	5,5 (6,6)	4,7 (5,7)	4,1 (4,9)	
-1,5	EW	5,0# (5,0#)	7,8# (7,8#)	12,9# (12,9#)	10,8 (13,0)	8,8 (10,5)	7,3 (8,8)	6,2 (7,4)	5,3 (6,4)	4,6 (5,5)		
-3,0	EW	6,3# (6,3#)	8,7# (8,7#)	12,9# (12,9#)	10,5 (12,7)	8,5 (10,2)	7,1 (8,5)	6,0 (7,2)	5,2 (6,2)	4,5 (5,5)		
-4,5	EW		9,6# (9,6#)	13,4# (13,4#)	10,4 (12,5)	8,4 (10,1)	7,0 (8,4)	5,9 (7,1)	5,1 (6,2)	4,5 (5,5)		
-6,0	EW			13,6 (14,3#)	10,4 (12,5)	8,4 (10,1)	7,0 (8,4)	5,9 (7,1)	5,2 (6,2)			
-7,5	EW				10,5 (12,7)	8,5 (10,2)	7,0 (8,5)	6,0 (7,2)				
-9,0	EW											

Industrial Stick 9,00 m (Variant 3C)

Height (m)	Under-carriage	Radius of load from centerline of machine (m)										
		4,5	6,0	7,5	9,0	10,5	12,0	13,5	15,0	16,5	18,0	19,5
21,0	EW											
19,5	EW											
18,0	EW						6,5# (6,5#)					
16,5	EW						6,1# (6,1#)	6,0# (6,0#)				
15,0	EW						6,0# (6,0#)	5,8# (5,8#)	5,7# (5,7#)			
13,5	EW						5,9# (5,9#)	5,7# (5,7#)	5,6# (5,6#)			
12,0	EW						6,0# (6,0#)	5,8# (5,8#)	5,6# (5,6#)	5,4# (5,4#)		
10,5	EW						6,2# (6,2#)	5,9# (5,9#)	5,6# (5,6#)	5,5# (5,5#)		
9,0	EW					6,9# (6,9#)	6,5# (6,5#)	6,1# (6,1#)	5,8# (5,8#)	5,5# (5,5#)	5,0 (5,4#)	
7,5	EW				8,2# (8,2#)	7,4# (7,4#)	6,8# (6,8#)	6,4# (6,4#)	6,0# (6,0#)	5,7# (5,7#)	4,8 (5,4#)	
6,0	EW			10,5# (10,5#)	9,1# (9,1#)	8,0# (8,0#)	7,3# (7,3#)	6,7# (6,7#)	6,2# (6,2#)	5,7 (5,8#)	4,7 (5,5)	
4,5	EW	20,9# (20,9#)	15,1# (15,1#)	12,0# (12,0#)	10,0# (10,0#)	8,7# (8,7#)	7,8# (7,8#)	7,0# (7,0#)	6,5# (6,5#)	5,4 (6,0#)	4,5 (5,4)	
3,0	EW	7,3# (7,3#)	17,6# (17,6#)	13,5# (13,5#)	11,0# (11,0#)	9,4# (9,4#)	8,3# (8,3#)	7,4 (7,4#)	6,1 (6,8#)	5,2 (6,1)	4,4 (5,2)	
1,5	EW	4,5# (4,5#)	11,5# (11,5#)	14,9# (14,9#)	12,0# (12,0#)	10,1# (10,1#)	8,3 (8,8#)	6,9 (7,8#)	5,8 (6,9)	4,9 (5,9)	4,2 (5,0)	
0	EW	4,5# (4,5#)	8,8# (8,8#)	14,8 (15,9#)	11,6 (12,8#)	9,4 (10,7#)	7,8 (9,2)	6,5 (7,7)	5,5 (6,6)	4,7 (5,6)	4,0 (4,9)	
-1,5	EW	5,2# (5,2#)	8,3# (8,3#)	13,9 (14,4#)	10,9 (13,0)	8,8 (10,6)	7,3 (8,8)	6,2 (7,4)	5,3 (6,3)	4,5 (5,5)	3,9 (4,8)	
-3,0	EW	6,0# (6,0#)	8,6# (8,6#)	13,3# (13,3#)	10,4 (12,5)	8,4 (10,1)	7,0 (8,4)	5,9 (7,1)	5,1 (6,1)	4,4 (5,3)	3,8 (4,7)	
-4,5	EW	6,9# (6,9#)	9,2# (9,2#)	13,1 (13,2#)	10,1 (12,3)	8,2 (9,9)	6,8 (8,2)	5,8 (7,0)	5,0 (6,0)	4,3 (5,2)	3,8 (4,6)	
-6,0	EW		9,8# (9,8#)	13,0 (13,6#)	10,0 (12,1)	8,0 (9,8)	6,7 (8,1)	5,7 (6,9)	4,9 (6,0)	4,3 (5,2)		
-7,5	EW			13,1 (14,3#)	10,0 (12,2)	8,1 (9,8)	6,7 (8,1)	5,7 (6,9)	4,9 (6,0)			
-9,0	EW					8,2 (9,9)	6,8 (8,2)	5,8 (7,0)				

The lift capacities are stated in metric tonnes (t) on the lifting gear's stick tip, and can be lifted 360° on firm, level supporting surface. Values quoted in brackets are valid for the undercarriage when in longitudinal position. Capacities are valid for 600 mm wide triple grouser pads. Indicated loads are based on ISO 10567 standard and do not exceed 75 % of tipping or 87 % of hydraulic capacity (indicated via #). Lifting capacity of the excavator is limited by machine stability, hydraulic capacity and maximum permissible load of the load hook.
According to European Standard, EN 474-5: In the European Union excavators have to be equipped with an overload warning device, a load diagram and automatic check valves on the hoist cylinders, when they are used for lifting operations which require the use of lifting accessories.

Lift Capacities

with Industrial-Type Gooseneck Boom 11,50 m

Industrial Stick 7,80 m (Variant 3D)

Height (m)	Under-carriage	Radius of load from centerline of machine (m)										
		4,5	6,0	7,5	9,0	10,5	12,0	13,5	15,0	16,5	18,0	19,5
21,0	EW											
19,5	EW		12,9# (12,9#)									
18,0	EW			10,8# (10,8#)	9,7# (9,7#)							
16,5	EW			10,3# (10,3#)	9,3# (9,3#)	8,6# (8,6#)	8,1# (8,1#)					
15,0	EW				9,1# (9,1#)	8,4# (8,4#)	7,8# (7,8#)	7,4# (7,4#)				
13,5	EW				9,1# (9,1#)	8,3# (8,3#)	7,8# (7,8#)	7,3# (7,3#)				
12,0	EW			10,2# (10,2#)	9,2# (9,2#)	8,4# (8,4#)	7,8# (7,8#)	7,3# (7,3#)	6,9# (6,9#)			
10,5	EW			10,7# (10,7#)	9,6# (9,6#)	8,7# (8,7#)	8,0# (8,0#)	7,4# (7,4#)	7,0# (7,0#)	5,9 (6,6#)		
9,0	EW		13,5# (13,5#)	11,5# (11,5#)	10,1# (10,1#)	9,0# (9,0#)	8,2# (8,2#)	7,6# (7,6#)	7,1# (7,1#)	5,8 (6,7#)		
7,5	EW	19,3# (19,3#)	15,1# (15,1#)	12,5# (12,5#)	10,8# (10,8#)	9,5# (9,5#)	8,5# (8,5#)	7,8# (7,8#)	6,9 (7,2#)	5,7 (6,6)		
6,0	EW	23,4# (23,4#)	17,2# (17,2#)	13,8# (13,8#)	11,6# (11,6#)	10,0# (10,0#)	8,9# (8,9#)	8,0 (8,1#)	6,6 (7,4#)	5,5 (6,4)	4,6 (5,4)	
4,5	EW	6,9# (6,9#)	19,5# (19,5#)	15,1# (15,1#)	12,4# (12,4#)	10,6# (10,6#)	9,2 (9,3#)	7,6 (8,4#)	6,3 (7,4)	5,3 (6,2)	4,5 (5,3)	
3,0	EW	2,4# (2,4#)	11,2# (11,2#)	16,3# (16,3#)	13,0 (13,2#)	10,5 (11,2#)	8,6 (9,7#)	7,2 (8,4)	6,0 (7,1)	5,1 (6,0)	4,3 (5,2)	
1,5	EW	2,5# (2,5#)	7,8# (7,8#)	15,3 (17,2#)	12,1 (13,9#)	9,8 (11,5)	8,1 (9,5)	6,8 (8,0)	5,8 (6,8)	4,9 (5,8)	4,2 (5,0)	
0	EW	3,7# (3,7#)	7,3# (7,3#)	14,0# (14,0#)	11,3 (13,5)	9,2 (10,9)	7,7 (9,1)	6,5 (7,7)	5,5 (6,6)	4,7 (5,7)	4,1 (4,9)	
-1,5	EW		7,8# (7,8#)	12,9# (12,9#)	10,8 (13,0)	8,8 (10,5)	7,3 (8,7)	6,2 (7,4)	5,3 (6,4)	4,6 (5,5)		
-3,0	EW		8,7# (8,7#)	12,9# (12,9#)	10,5 (12,7)	8,5 (10,2)	7,1 (8,5)	6,0 (7,2)	5,2 (6,2)	4,5 (5,5)		
-4,5	EW			13,4# (13,4#)	10,4 (12,5)	8,4 (10,1)	7,0 (8,4)	5,9 (7,1)	5,1 (6,2)	4,5 (5,5)		
-6,0	EW					8,4 (10,1)	7,0 (8,4)					
-7,5	EW											
-9,0	EW											

Industrial Stick 9,00 m (Variant 3D)

Height (m)	Under-carriage	Radius of load from centerline of machine (m)										
		4,5	6,0	7,5	9,0	10,5	12,0	13,5	15,0	16,5	18,0	19,5
21,0	EW		11,1# (11,1#)									
19,5	EW			10,4# (10,4#)	9,3# (9,3#)							
18,0	EW				8,7# (8,7#)	8,1# (8,1#)	7,6# (7,6#)					
16,5	EW				8,4# (8,4#)	7,8# (7,8#)	7,3# (7,3#)	6,9# (6,9#)				
15,0	EW				8,2# (8,2#)	7,6# (7,6#)	7,1# (7,1#)	6,8# (6,8#)	6,5# (6,5#)			
13,5	EW				8,2# (8,2#)	7,6# (7,6#)	7,1# (7,1#)	6,7# (6,7#)	6,4# (6,4#)			
12,0	EW				8,4# (8,4#)	7,7# (7,7#)	7,2# (7,2#)	6,7# (6,7#)	6,4# (6,4#)	6,1# (6,1#)		
10,5	EW				8,7# (8,7#)	7,9# (7,9#)	7,3# (7,3#)	6,9# (6,9#)	6,4# (6,4#)	6,1# (6,1#)		
9,0	EW			10,3# (10,3#)	9,2# (9,2#)	8,3# (8,3#)	7,6# (7,6#)	7,0# (7,0#)	6,6# (6,6#)	6,0 (6,2#)	4,9 (5,8)	
7,5	EW		13,2# (13,2#)	11,2# (11,2#)	9,8# (9,8#)	8,7# (8,7#)	7,9# (7,9#)	7,3# (7,3#)	6,7# (6,7#)	5,9 (6,3#)	4,8 (5,7)	
6,0	EW	19,6# (19,6#)	15,1# (15,1#)	12,4# (12,4#)	10,6# (10,6#)	9,3# (9,3#)	8,3# (8,3#)	7,5# (7,5#)	6,8 (6,9#)	5,6 (6,4#)	4,7 (5,5)	
4,5	EW	23,9# (23,9#)	17,3# (17,3#)	13,7# (13,7#)	11,4# (11,4#)	9,9# (9,9#)	8,7# (8,7#)	7,8 (7,8#)	6,5 (7,1#)	5,4 (6,4)	4,5 (5,4)	
3,0	EW	7,3# (7,3#)	19,5# (19,5#)	15,0# (15,0#)	12,3# (12,3#)	10,4# (10,4#)	8,9 (9,1#)	7,3 (8,1#)	6,1 (7,2)	5,2 (6,1)	4,4 (5,2)	
1,5	EW	4,5# (4,5#)	11,5# (11,5#)	16,1# (16,1#)	12,6 (13,0#)	10,1 (11,0#)	8,3 (9,5#)	6,9 (8,1)	5,8 (6,9)	4,9 (5,9)	4,2 (5,0)	
0	EW	4,5# (4,5#)	8,8# (8,8#)	14,8 (16,9#)	11,6 (13,6#)	9,4 (11,1)	7,8 (9,2)	6,5 (7,7)	5,5 (6,6)	4,7 (5,6)	4,0 (4,9)	
-1,5	EW	5,2# (5,2#)	8,3# (8,3#)	13,9 (14,4#)	10,9 (13,0)	8,8 (10,6)	7,3 (8,8)	6,2 (7,4)	5,3 (6,3)	4,5 (5,5)	3,9 (4,8)	
-3,0	EW	6,0# (6,0#)	8,6# (8,6#)	13,3# (13,3#)	10,4 (12,5)	8,4 (10,1)	7,0 (8,4)	5,9 (7,1)	5,1 (6,1)	4,4 (5,3)	3,8 (4,7)	
-4,5	EW		9,2# (9,2#)	13,1 (13,2#)	10,1 (12,3)	8,2 (9,9)	6,8 (8,2)	5,8 (7,0)	5,0 (6,0)	4,3 (5,2)	3,8 (4,6)	
-6,0	EW			13,0 (13,6#)	10,0 (12,2)	8,1 (9,8)	6,7 (8,1)	5,7 (6,9)	4,9 (6,0)	4,3 (5,2)		
-7,5	EW											
-9,0	EW											

The lift capacities are stated in metric tonnes (t) on the lifting gear's stick tip, and can be lifted 360° on firm, level supporting surface. Values quoted in brackets are valid for the undercarriage when in longitudinal position. Capacities are valid for 600 mm wide triple grouser pads. Indicated loads are based on ISO 10567 standard and do not exceed 75 % of tipping or 87 % of hydraulic capacity (indicated via #). Lifting capacity of the excavator is limited by machine stability, hydraulic capacity and maximum permissible load of the load hook.
According to European Standard, EN 474-5: In the European Union excavators have to be equipped with an overload warning device, a load diagram and automatic check valves on the hoist cylinders, when they are used for lifting operations which require the use of lifting accessories.

Choice of Cab Elevation and Cab Protection

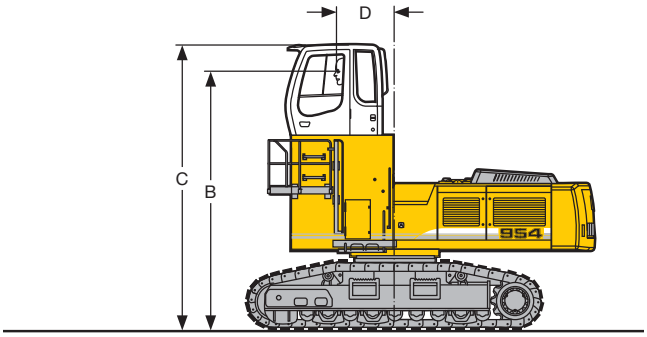

Rigid Cab Elevation

	EW mm	HD-W mm	EW mm	HD-W mm
Height	1200	1200	2000	2000
B	4165	4020	4965	4820
C	4660	4515	5460	5315
D	1105	1105	1105	1105
Weight includes basic machine with pad width 600 mm	53250 kg	46950 kg	53450 kg	47150 kg

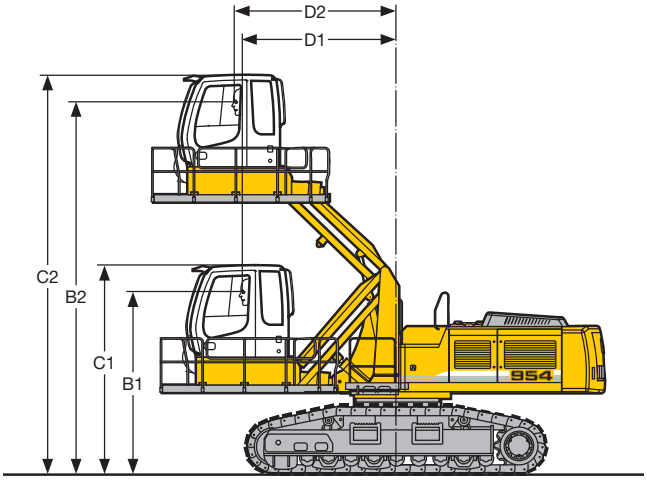

Hydraulic Cab Elevation (Parallelogram) + Intermediate Piece 0,5 m

	EW mm	HD-W mm
B1	3463	3320
B2	7033	6890
C1	3960	3815
C2	7530	7385
D1	2890	2890
D2	3039	3039

The parallelogram cab raiser allows the operator to choose his eye level between dimensions B1 and B2. For a transport height lower than C1 the shell of the cab can be removed. The overall height is then E.

FOPS Guard

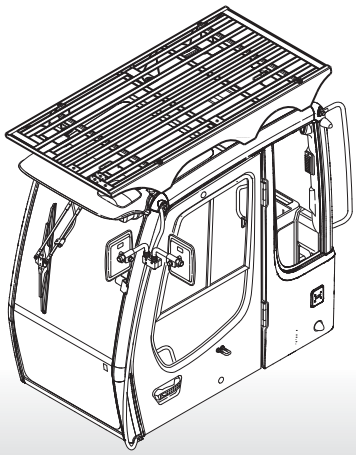

Front Guard

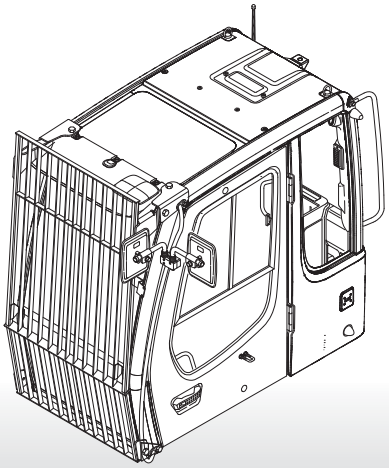

Variety of Tools

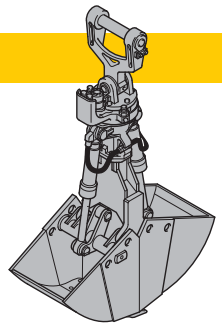

Shells for Loose Material

		Clamshell Model 22 B	Shells for loose material with cutting edge (without teeth)
Cutting width of shells	mm	1500	1500
Capacity	m³	1,85	2,20
Total weight	kg	2300	2400

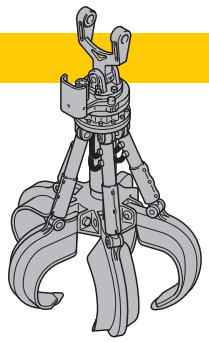

Multiple Tine Grapples

			open tines			semi-closed tines			closed tines		
Grapple model 72 C	Capacity	m³	1,20	1,40	1,60	1,20	1,40	1,60	1,20	1,40	1,60
(4 tines)	Weight	kg	1970	2000	2005	2290	2325	2385	2590	2675	2705
Grapple model 72 C	Capacity	m³	1,20	1,40	1,60	1,20	1,40	1,60	1,20	1,40	1,60
(5 tines)	Weight	kg	2370	2410	2420	2750	2815	2885	2865	2945	2990

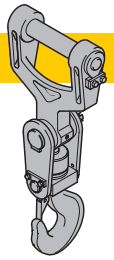

Crane Hook with Suspension

Max. load	t	12,5	25
Height with suspension	mm	930	1200
Total weight	kg	96	410

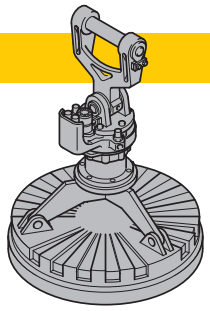

Electro Magnets with Suspension

Magnet information on request

Equipment

Undercarriage

	s	o
Two-stage travel motors	•	
Three track guide per track	•	
Lifetime lubricated track rollers	•	
Hydraulic hose protection	•	
Idler protection	•	
Tracks sealed and greased	•	
Different undercarriage versions EW + HD-W		•
Different track pad width		•
Four track guide only HD-W		•
Renforced cover		•
Streng. bottom sheet center part only EW		•

Uppercarriage

	s	o
Electric fuel tank filler pump		•
Maintenance-free swing brake lock	•	
Handrails, Non slip surfaces	•	
Main switch for electric circuit	•	
Engine hood with lift help	•	
Pedal controlled positioning swing brake	•	
Sound insulation	•	
Customized colors		•
Maintenance-free HD-batteries	•	
Lockable tool box	•	
Tool kit	•	

Hydraulics

	s	o
Hydraulic tank shut-off valve	•	
Extra hydr. control for hydr. swivel		•
Pressure compensation	•	
Hook up for pressure checks	•	
Pressure storage for controlled lowering of attachments with engine turned off	•	
Filter with partial micro filteration (5 µm)	•	
Electronic pump regulation	•	
Stepless mode system (ECO)	•	
Flow compensation	•	
Four mixed modes, can also be adjusted	•	
Full flow micro filtration		•
Bio degradable hydraulic oil		•
Additional hydraulic circuits		•

Engine

	s	o
After-cooled	•	
Unit pump system	•	
Turbo charger	•	
Dry-type air cleaner w/pre-cleaner, main and safety element	•	
Air filter with automatic dust ejector	•	
Sensor controlled engine idling	•	
Engine cold starting aid		•

Operator's Cab

	s	o
Storage tray	•	
Displays for engine operating condition	•	
Mechanical hour meters, readable from outside the cab	•	
Roof hatch	•	
All-round adjustable roof vent		
6-way adjustable seat	•	
Airpressure operator seat with heating and head-rest		•
Seat and consoles independently adjustable	•	
Extinguisher		•
Removable customized foot mat	•	
Dome light	•	
Inside rear mirror	•	
Cab heater with defroster	•	
Cloth hook	•	
Air conditioning	•	
Electric cool box		•
Bullet proof window (fixed installation – can not be opened)		•
Stereo radio		•
Preparation for radio installation		•
Rain hood over front window opening	•	
Beacon		•
All tinted windows	•	
Door with sliding window	•	
Auxiliary heating		•
Sun roller blind	•	
Electronic drive away lock		•
Wiper/washer	•	
Cigarette lighter and ashtray	•	
Additional flood lights		•

Attachment

	s	o
Flood lights	•	
Hydr. lines for clam operation in stick	•	
Industrial-type gooseneck sticks with remote hydraulic pin puller		•
Sealed pivots	•	
Safety lift hook		•
Liebherr line of clams		•
Liebherr semi-automatic central lubrication system	•	
Liebherr fully-automatic central lubrication system		•
Safety check valves on hoist cylinder, regenerative	•	
Safety check valves on stick cylinder, regenerative	•	
Hose quick connection	•	
Customized colors		•
Overload warning device		•
Cylinders with shock absorber	•	

S = Standard, O = Option

Options and/or special attachments, supplied by vendors other than Liebherr, are only to be installed with the knowledge and approval of Liebherr to retain warranty.

Printed in Germany by Typodruck RG-BK LFR/SP 10331134-2-06.07 Illustrations and data may differ from standard equipment. Subject to change without notice. All indicated loads are based in accordance with ISO 9248.

Liebherr-France SAS
2, avenue Joseph Rey, B.P. 90287, F-68005 Colmar Cedex
☎ +33 389 21 30 30, Fax +33 389 21 37 93
www.liebherr.com, E-Mail: info.lfr@liebherr.com